PBR ROOF PANEL

ERECTION GUIDE

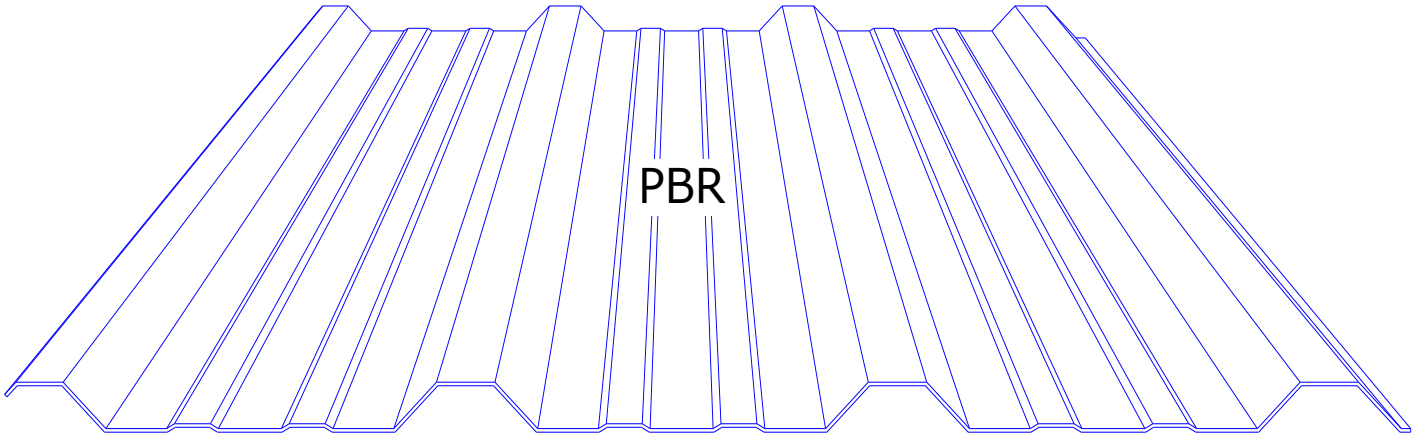

BEHLEN®
4025 E. 23rd St. • Box 569
Columbus, Nebraska 68601

IMPORTANT NOTE:
If prints are provided for this project, this book must accompany them.

NOTE: See back side of cover for latest changes to this manual.

08/03/2026

REV: 09/24/2026

LATEST CHANGES	BY: SJW	DATE: 09/24/2026
PAGE	CHANGE	
18	Revised the fastener patterns for UL90 roof panels	
53, 54	Revised the fastener patterns for UL90 Translucent Panels	

TABLE OF CONTENTS

PAGE

1 GENERAL INFORMATION 3

1.A INTRODUCTION 3
1.B SAFETY AND OSHA REGULATIONS 3
1.C QUALITY 4
1.D ERECTION DRAWINGS 4
1.E EQUIPMENT AND TOOLS 4
1.F RECEIVING SHIPMENT 5
1.G UNLOADING MATERIALS 5
1.H STORAGE 6
1.I LAYOUT OF COMPONENTS 7

2 FRAMING 7

2.A ERECTION SEQUENCE 7
2.B GENERAL FRAMING 7

3 TRIM COMPONENTS 8

3.A TRIM IDENTIFICATION 8
3.B HANDLING LONG TRIM 15
3.C PROTECTIVE FILM REMOVAL 15
3.D TOUCH-UP PAINT 16

4 FASTENERS 17

4.A IDENTIFICATION AND USAGE 17
4.B FASTENER PATTERNS 18
4.C SEATING OF FASTENERS 19
4.D TROUBLE SHOOTING GUIDE 19

5 MASTICS 21

5.A TAPE IDENTIFICATION AND USAGE 21
5.B GUN GRADE IDENTIFICATION AND USAGE 21

6 BEGINNING ERECTION 21

6.A ALIGNING PURLINS 21
6.B BLANKET INSTALLATION 22
6.C ERECTION SEQUENCE 24

7 INSTALL EAVE TRIM (LOW EAVE) 25

7.A POSITIONING AND STARTING AT CORNER 25
7.B SPLICING EAVE TRIM 26

8 INSTALL EAVE FLASHING (USED BEHIND GUTTER) 27

8.A POSITIONING AND STARTING AT CORNER 27
8.B SPLICING EAVE FLASHINGS 28

9 ROOF PANEL INSTALLATION 28

9.A CLEANING METAL CHIPS FROM PANELS 28
9.B SHEETING DIRECTION, HOLDING MODULE AND ROOF TRAFFIC 28
9.C LOCATING FIRST PANEL AT EAVE 29
9.D INSTALLING NEXT PANEL UPSLOPE 30
9.E INSTALLING SUBSEQUENT ROOF PANELS 31
9.F INSTALLING RIDGE CAPS 31

10 RAKE TRIM *32*

10.A POSITIONING RAKE TRIM 32
10.B SPLICING RAKE TRIM 33
10.C INSTALLING PEAK FLASHING AND SIGN 34
10.D RAKE TRIM TO EAVE TRIM CORNER 35
10.E RAKE TRIM TO EAVE FLASHING CORNER 35
10.F ENDING AT HIGH EAVE CORNER 36

11 EAVE TRIM (HIGH EAVE) *36*

11.A POSITIONING AND STARTING AT CORNER 36
11.B SPLICING HIGH EAVE TRIM 37
11.C FINISHING (EAVE TO RAKE) AT CORNER 37
11.D INSTALLING SIGN 38

12 STANDARD GUTTER *38*

12.A INSTALLING END CAP 38
12.B SPREADER ANGLES 39
12.C POSITIONING FIRST GUTTER AT CORNER 39
12.D INSTALL GUTTER HANGER STRAPS 40
12.E SPLICING GUTTER 40
12.F INSTALLING GUTTER EXPANSION JOINT 40
12.G FINISHING (GUTTER TO RAKE) AT CORNER 41

13 HIGH CAPACITY GUTTER *42*

13.A INSTALLING END CAP 42
13.B SPREADER ANGLES 42
13.C POSITIONING FIRST GUTTER AT CORNER 43
13.D INSTALLING GUTTER HANGER STRAPS 43
13.E SPLICING GUTTER 44
13.F INSTALLING GUTTER EXPANSION JOINT 44
13.G INSTALLING GUTTER STOP 45
13.H FINISHING (GUTTER TO RAKE) AT CORNER 45

14 RIB CONCEALING GUTTER *46*

14.A INSTALLING END CAP 46
14.B POSITIONING FIRST GUTTER AT CORNER 47
14.C INSTALLING GUTTER HANGERS 47
14.D SPLICING GUTTER 48
14.E INSTALLING GUTTER EXPANSION JOINT 48
14.F FINISH (GUTTER TO RAKE) AT CORNER 49
14.G FIELD MITERING AT CORNERS 50

15 ACCESSORIES *52*

15.A DOWNSPOUTS 52
15.B SKYLIGHTS 53
15.C RIDGE VENTILATOR 55
15.D PIPE FLASHING 56

1 GENERAL INFORMATION

NOTE: INFORMATION CONTAINED IN THIS BOOK WILL NOT SUPERSEDE INFORMATION SHOWN ON ERECTION PLANS SUPPLIED WITH THE BUILDING.

1.A INTRODUCTION

The erection information presented herein is provided as a supplement to the erection drawings prepared for your specific job. The information, illustrations and procedures in this guide are typical for most Behlen buildings. Variations may occur because of special building requirements. Always refer to the erection drawings supplied with each job which will govern specific part and assembly arrangements and applicable installation details.
By studying the erection drawings and this guide before arrival of the steel at the job site, these cost critical requirements can be predetermined.

1. Size and scheduling of the work crew.
2. Type, size and quantity of tools and hoisting equipment needed.
3. Proper scheduling of erection sequence.
4. Advance notations on erection drawings to call out items requiring field location or modification.
5. Identification and resolution of questions.

Because Behlen products are constantly being improved, the information contained herein is subject to change without notice.

1.B SAFETY AND OSHA REGULATIONS

Behlen Mfg. Co. strongly recommends that safe working conditions and accident prevention practices be the top priority on any job site.

Contractors should ensure compliance with all relevant local, state and federal safety and health standards, including, but not limited to 29 CFR 1926 Subpart R, Steel Erection Standards.

Make certain all employees know the safest and most productive way of erecting a building. Emergency telephone numbers, location of first aid stations and emergency procedures should be known to all employees.

Daily meetings highlighting safety procedures, the use of hard hats, rubber sole shoes for roof work, proper equipment for handling material and safety nets where possible are recommended erection practices.

OSHA REGULATIONS

The Occupational Safety and Health Act has promulgated many regulations applicable to the erection of this or any other building. These regulations, identified as Part 1926, Safety and Health Regulation for Construction, are available from any government bookstore.
Compliance with OSHA regulations should be recognized as a job site requirement. Failure to do so may result in substantial fines.
Identification of specific requirements for erection is beyond the scope of this documentation. The objective of the OSHA standards is to protect the worker from injury or illness. Past erection methods may not comply with current requirements.

Safe erection practices may be further defined and made mandatory by state or local ordinances. Maintenance of good housekeeping on the job site is recognized as being most important to both OSHA compliance and to successful job completion.

1.C

QUALITY

The builder and/or erector is expected to be thoroughly familiar with the contents of this manual. If the erection crew is not experienced in the proper techniques in the erection of a BEHLEN frame building, technical field assistance is available. BEHLEN must charge for this service. Contact our Customer Service Dept. for current rates.
Deviations from the instructions outlined in the manual may void any and all warranties.

1.D ERECTION DRAWINGS

Erection drawings fall into two categories: (1) Plan drawings which cover general framing, and (2) detail drawings which contain specific part and assembly information.

1. Plan drawings will include the following:
   A. Anchor Bolt Plan
   B. Roof Framing
   C. Wall Framing
   D. Main Frame Cross Section
   E. Endwall Panel
   F. Sidewall Panel

Each plan drawing will include necessary dimensions and part numbers for proper positioning of parts during erection. Each page will be identified by a sheet number in the title block.

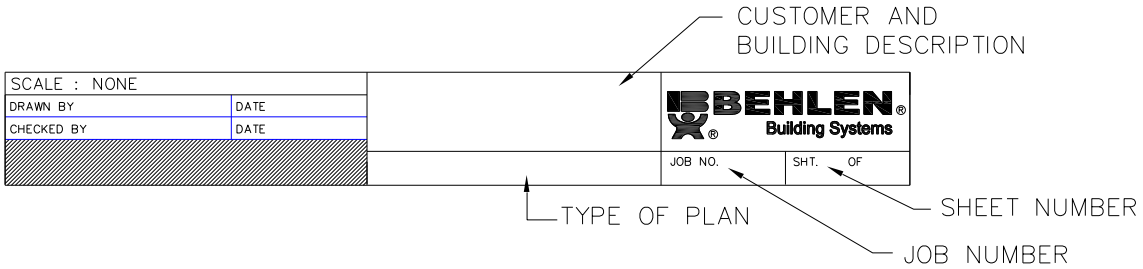

ILLUS. 1.1 TITLE BLOCK ON PLANS

2. Detail drawings may include the following:
   A. Structural Framing Details
   B. Covering and Trim Details
   C. Accessories, such as: Overhangs, Facades, etc.

Each page will be identified by a sheet number in the title block. Details will not be referenced from one page to another but will be clearly identified in the title.

1.E EQUIPMENT AND TOOLS

Proper tools of suitable size increase the production and decrease the possibility of rework.
A spreader bar used with a fork lift or crane is one piece of equipment that is essential in unloading sheeting. The spreader bar eliminates the possibility of buckling long sheets when they are being lifted from the bed of the truck. Unloading primary and secondary structural steel can also be facilitated by the use of a spreader bar.
Self-drilling screws should be installed with a 1800 rpm (about 4 amp) screw gun. Impact drivers/guns should not be used as these can damage or break screws when installing. Behlen is not responsible for materials damaged by improper installation or installation methods.

SAFETY PRECAUTION
Use of heavy-duty, grounded electrical extension cords is recommended.

1.F RECEIVING SHIPMENT

The Installer should check the materials received against the shipping document during unloading and make note of any shortages, damage on the shipping document before signing it as receiver of the shipments. Some items are received in bundles or boxes (such as trim and panels) and are signed for as such. If damage or shortages are noted on shipping document and verified, replacement parts will be shipped.

1.G UNLOADING MATERIALS

The careful unloading of building components is recommended. Hoist or lift structural members, crates and bundles from the truck. Trim which is lighter than structural members require more care. Trim should be handled with web belting or by hand.

SAFETY PRECAUTION:
Stay well in the clear of loads being moved by any lifting device.

It is the BUYER'S responsibility to supply equipment for the safe unloading of the material. Behlen Mfg. Co. is not liable for any damage of material or injury to personnel occurring during or after unloading. Below are suggested methods of lifting materials. Improper unloading and handling of bundles and crates may cause damage to material, equipment or injury to personnel.

STRUCTURAL FRAMING

- Columns, rafters, girts, purlins and other like components should be lifted with a forklift or crane utilizing proper rigging methods positioned at the center of gravity.

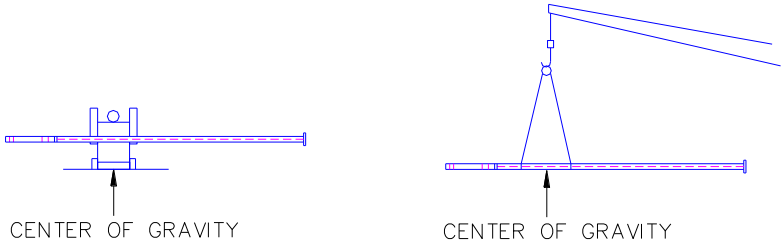

ILLUS. 1.2 LIFTING STRUCTURAL MEMBERS

PANEL BUNDLES

- Panel bundles up to 20' can be lifted with a forklift with a minimum of 32" between forks. The forks should be positioned under the panel bundle where the center of gravity has been indicated.
- Panel bundles greater than 20' should be lifted with a crane or forklift utilizing a spreader bar with nylon straps spaced approximately at 1/3 points. Do **not** use steel chokers of chains.
- Banding on bundles should be left intact until all lifting of panels is complete.
- Do not let straps slide on panel edges as the sharp edges will cut straps.

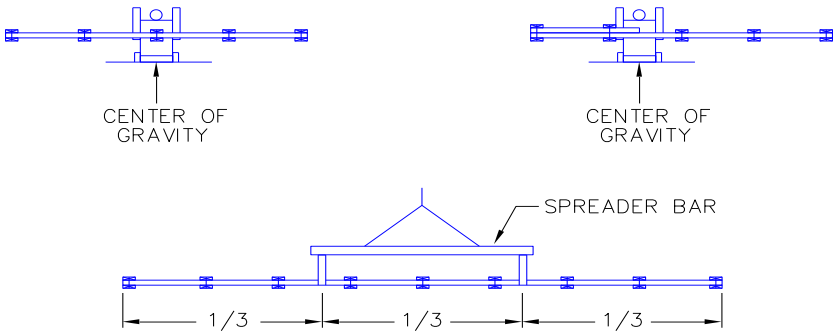

ILLUS. 1.3 LIFTING PANEL BUNDLES

WOOD CRATES

- Wood crates should be lifted with either a forklift at the "lift points" indicated on the crate or a crane utilizing a spreader bar with nylon straps. Straps should be located at the wood blocking on the bottom of crate.
- Lift one crate at a time.

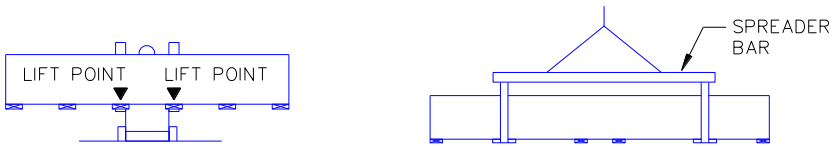

ILLUS. 1.4 LIFTING CRATES

08/03/2026

1.H STORAGE

Outside job site storage of all building components should be limited to a short duration just prior to erection and when site conditions are favorable. Warehouse storage should be used when adverse field conditions or long-term storage is anticipated.

TRIM STORAGE CONSIDERATIONS

All trim components are shipped in a wooden crate with a covering of nylon reinforced paper. Trim components have a protective film on the colored surface that should not be exposed to rain and/or sunlight prior to installation.
See Section 3.C for additional information concerning film on trim.

STORING COVERING

Short-term job site storage of roof and wall covering may be tolerated provided that care is taken to protect panel surfaces from trapped moisture.
Coated steel panels are subject to corrosion and discoloration if moisture becomes entrapped between panels. Inspect panels for entrapped moisture upon arrival at the job site and properly protect and store them in order to prevent accumulation of moisture between panels.

In addition to moisture due to rainfall, moisture can also form between panels due to condensation. When panels are not expected to be immediately installed, inside storage is recommended.

When outside storage is necessary, store in accordance with the following criteria:

a. Store panels in a protected area, out of standing water and drifting snow, etc.
b. When panels are stored on the ground, use a plastic ground cover to minimize condensation of moisture from the ground onto the panels.
c. Raise the bundles off the plastic ground cover to prevent contact with water puddles, and allow for air circulation over, under, and through the bundles to resist creation of and promote the evaporation of any condensed moisture.
d. Provide sufficient blocking to raise and support the bundles to prevent excessive bowing.
e. Slope panels for drainage of moisture from the panels.
f. Cover panels with a breathable waterproof cover, allowing for air circulation (do not wrap cover under panel bundles or restrict air movement).
g. Inspect panels daily for moisture accumulation.
h. If panel bundles contain moisture, the panels must be dried and restacked. Use care in restacking to not damage panels.
i. Secure opened or restacked panel bundles to prevent damage.

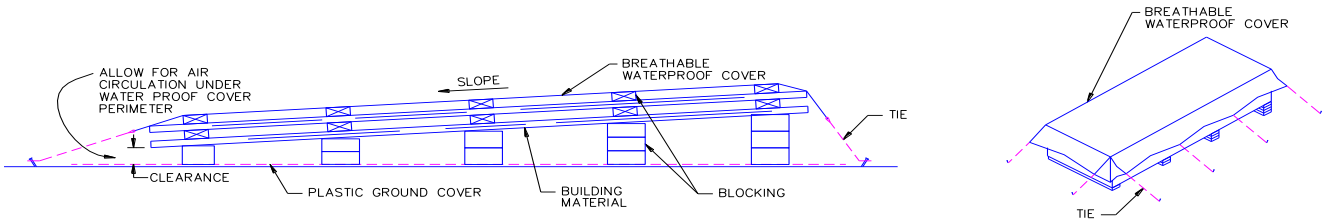

ILLUS. 1.5 PANEL STORAGE

STORING INSULATION

Insulation should not be delivered to the job site until panel erection is ready to begin. If insulation is to be stored at the job site, it should be set on blocks, off of the ground and covered for protection.

1.I LAYOUT OF COMPONENTS

The careful unloading of building components and proper location around the building site will increase erection efficiency. By spot placement of components nearest their final use point, material handling time and labor will be reduced. The material layout shown below is a typical plan.

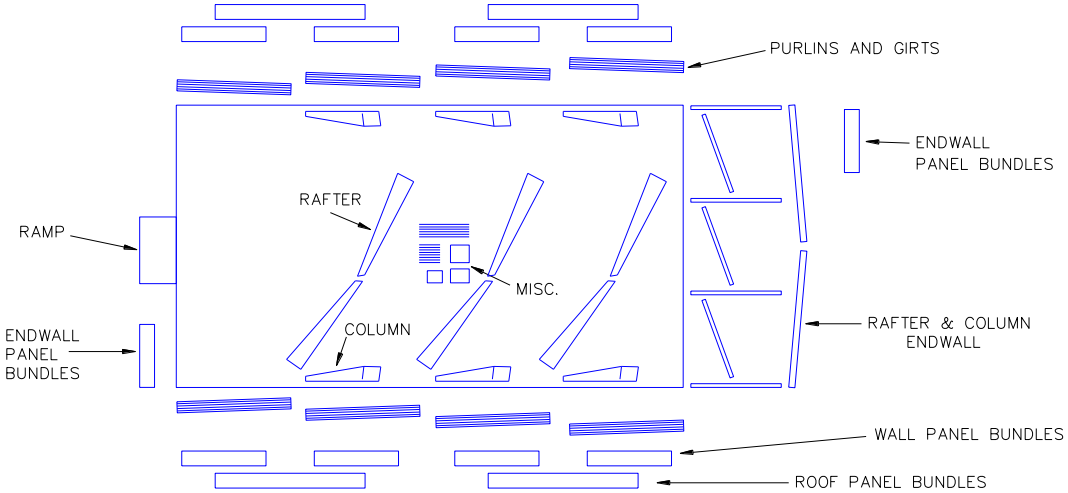

ILLUS. 1.6 COMPONENT SITE LAYOUT

All frame parts should be stored for easy access and erection with parts needed first on top. Place columns, rafters and crated components on blocking to prevent contact with ground. Block one end of members or crates higher to permit drainage. Rafters and columns should be laid on their flange edges with web parallel to the ground.

2 FRAMING

2.A ERECTION SEQUENCE

For erection information on the primary and secondary framing members see ERECTION SET for part numbers and WALL ERECTION GUIDE for suggested erection sequence and wall covering information.

2.B GENERAL FRAMING

The illustration below is intended as an aid in the identification and location of structural members and components used in the construction of frame buildings. Variances will occur depending upon type of building. Some building components such as flange braces, clips, angles and brackets are not shown.

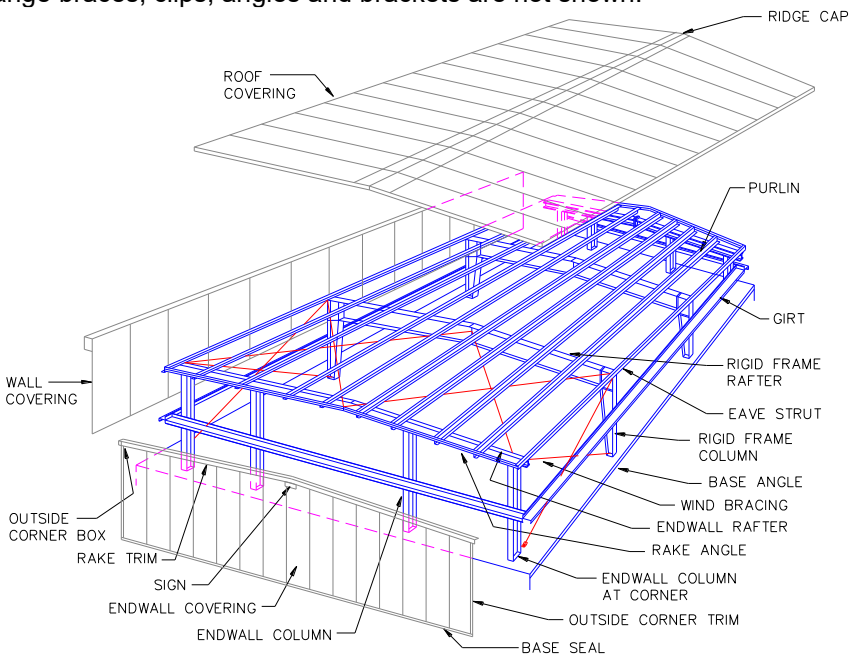

ILLUS. 2.1 GENERAL FRAMING AND COVERING

3 TRIM COMPONENTS

3.A TRIM IDENTIFICATION

The standard trims shown below will be used with PBR roof panels via Columbus, NE plant location only.

TITLE	PART NO.	PROFILE	DESCRIPTION	WHERE USED
Rake Trim	TR1-20	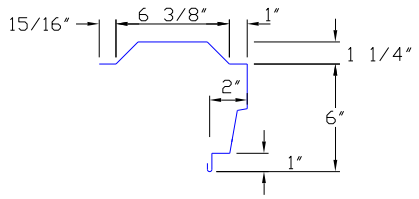	• 26 Ga. Material • 20'-6" Length	• Along endwall rake • PBR roof panel with Start Dimensions of 1" or less
	TR54-20	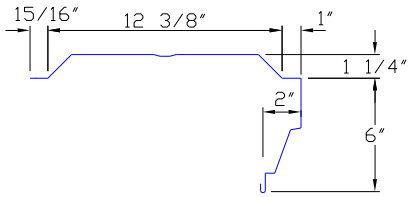	• 26 Ga. Material • 20'-6" Length	• Along endwall rake • PBR roof panel with Start Dimensions greater than 1" but no more than 5 15/16"
Peak Flashing	TR3-1	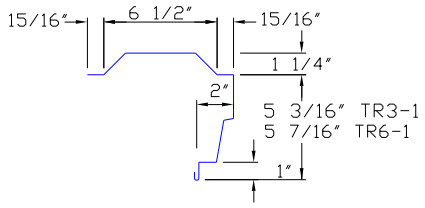	• 26 Ga. Material • 2 1/2" wide • For roof panel start dimensions of 1" or less	• At peak on roof slopes of 1 1/2" to 12" or less
	TR6-1			• At peak on roof slopes greater than 1 1/2" to 12" but no more than 3" to 12"
	TR55	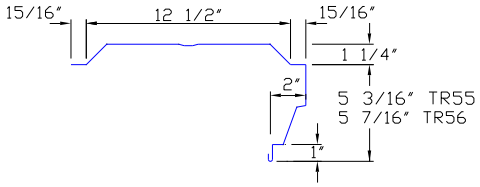	• 26 Ga. Material • 2 1/2" wide • For roof panel start dimensions greater than 1" but no more than 5 15/16"	• At peak on roof slopes of 1 1/2" to 12" or less
	TR56			• At peak on roof slopes greater than 1 1/2" to 12" but no more than 3" to 12"
Sign	TR21	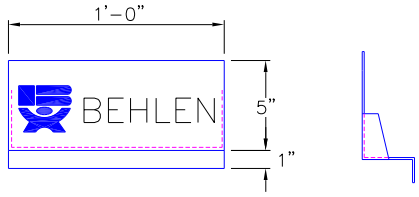	• 26 Ga. Material	• At peak on gabled buildings. • High eave on single slope buildings.
Eave Trim	TE1-20	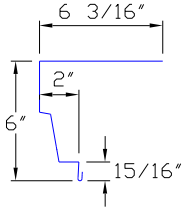	• 26 Ga. Material • 20'-6" Length	• Along low eave • Roof slopes of 1 1/2" to 12" or less
	TE6-20	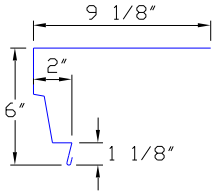		• Along low eave • Roof slopes greater than 1 1/2" to 12" but no more than 4" to 12"

High Eave Trim	TE17-20	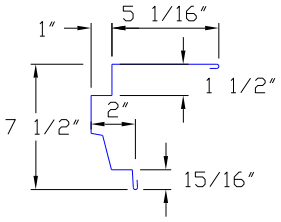	• 26 Ga. Material • 20’-6” Length	• Along high eave of single slope building • Roof slopes of 4” to 12” or less
Eave Flashing	TE22-20	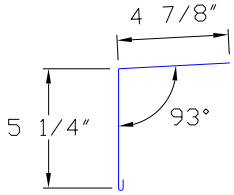	• 26 Ga. Material • 20’-6” Length	• Along low eave with gutter • Roof slopes of 1 1/2” to 12” or less
	TE23-20	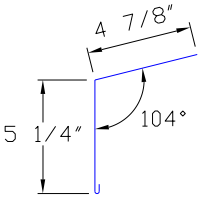	• 26 Ga. Material • 20’-6” Length	• Along low eave with gutter. • Roof slopes greater than 1 1/2” to 12” but no more than 4” to 12”
Bird Stop RH	TE78	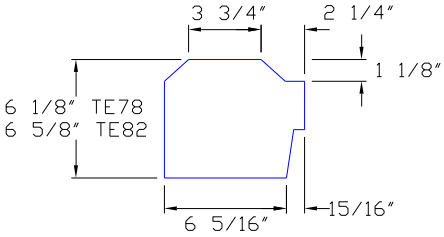	• 26 Ga. Material • Roof panel start dimensions of 1” or less	• Low eave with eave flashing, roof slopes of 3” to 12” or less.
	TE82			• Low eave with eave flashing, roof slopes greater than 3” to 12” but no more than 4” to 12”
	TE80	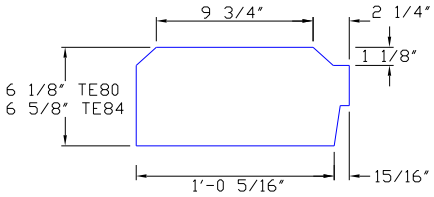	• 26 Ga. Material • Roof panel start dimensions greater than 1” but no more than 5 15/16”	• Low eave with eave flashing, roof slopes of 3” to 12” or less.
	TE84			• Low eave with eave flashing, roof slopes greater than 3” to 12” but no more than 4” to 12”
Bird Stop LH	TE79	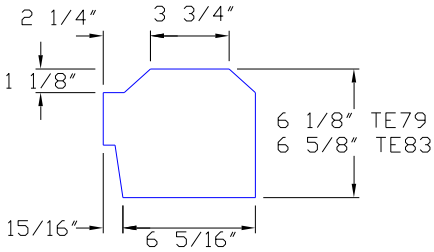	• 26 Ga. Material • Roof panel start dimensions of 1” or less	• Low eave with eave flashing, roof slopes of 3” to 12” or less.
	TE83			• Low eave with eave flashing, roof slopes greater than 3” to 12” but no more than 4” to 12”
	TE81	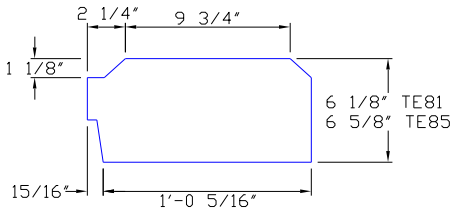	• 26 Ga. Material • Roof panel start dimensions greater than 1” but no more than 5 15/16”	• Low eave with eave flashing, roof slopes of 3” to 12” or less.
	TE85			• Low eave with eave flashing, roof slopes greater than 3” to 12” but no more than 4” to 12”

Standard Gutter	TE11-20	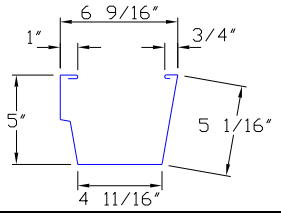	• 26 Ga. Material	• Along low eave with roof slopes of 3” to 12” or less
High Capacity Gutter	TE25-20	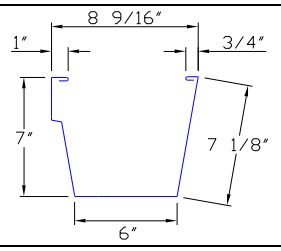	• 26 Ga. Material	• Along low eave with roof slopes of 3” to 12” or less
Rib Concealing Gutter	TE89-20	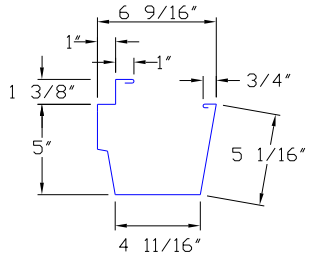	• 26 Ga. Material	• Along low eave with roof slopes of 3” to 12” or less • Conceals 1 1/4” high PBR major rib
LH Gutter End Cap	TE68	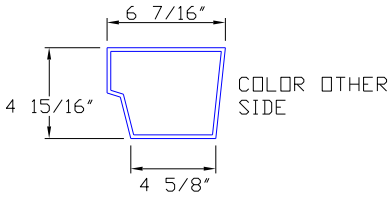	• 26 Ga. Material	• Used on left-hand end of gutters TE11-20 and TE89-20
RH Gutter End Cap	TE69	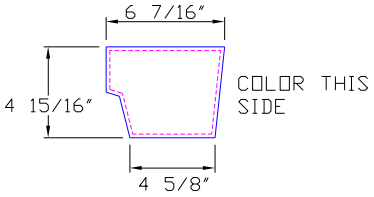	• 26 Ga. Material	• Used on right-hand end of gutters TE11-20 and TE89-20
LH Gutter End Cap	TE72	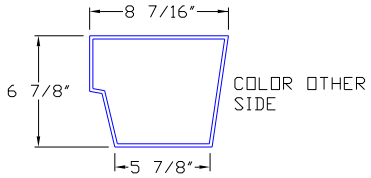	• 26 Ga. Material	• Used on left-hand end of high capacity gutter TE25-20
RH Gutter End Cap	TE73	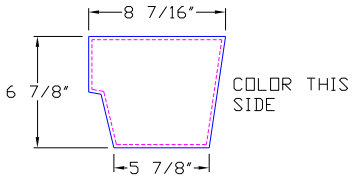	• 26 Ga. Material	• Used on right-hand end of high capacity gutter TE25-20
Gutter Stop	TE27	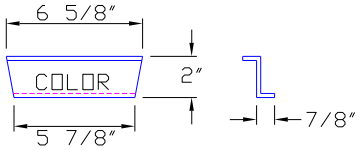	• 26 Ga. Material	• Used on left-hand and right-hand ends of TE25-20 gutter run.

08/03/2026

Gutter Spreader Angle	AG8	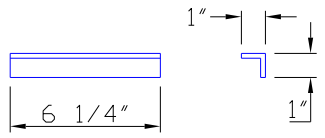	• 18 Ga. Galvanized Material	• Used along gutter TE11-20
	AG44	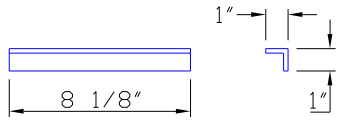	• 18 Ga. Galvanized Material	• Used along high capacity gutter TE25-20
Gutter Hanger Strap	MS15	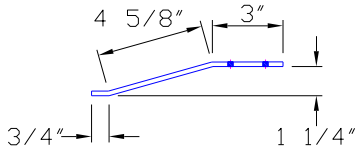	• 18 Ga. Galvanized material on roof slopes of 1 1/2” to 12” or less • 18 Ga. Galvanized material painted roof color on slopes more than 1 1/2” to 12”	• Along low eave gutters TE11-20
	MS24	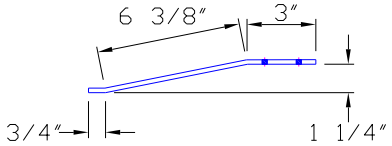	• 18 Ga. Galvanized material on roof slopes of 1 1/2” to 12” or less • 18 Ga. Galvanized material painted roof color on slopes more than 1 1/2” to 12”	• Along low eave high capacity gutters TE25-20
Gutter Hanger	MZ31	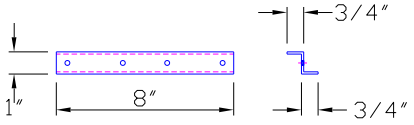	• 18 Ga. Galvanized material on roof slopes of 1 1/2” to 12” or less • 18 Ga. Galvanized material painted roof color on slopes more than 1 1/2” to 12”	• Along low eave with rib concealing gutters TE89-20
Outside Corner Box	TE13	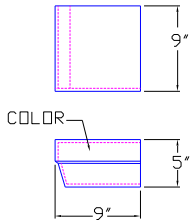	• 26 Ga. Material	• Intersection point of trims along the eave and rake
Corner Cap	TE15-1	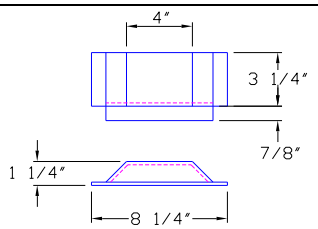	• 26 Ga. Material	• Closes rake trim at low eave corner • For roof panel start dimensions of 1” or less
Corner Cap	TE67	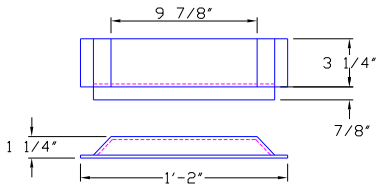	• 26 Ga. Material	• Closes rake trim at low eave corner • For roof panel start dimensions greater than 1” but no more than 5 15/16”

High Eave Corner Cap RH	TE18	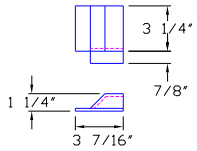	• 26 Ga. Material	• Closes rake trim at high eave corner
High Eave Corner Cap LH	TE19	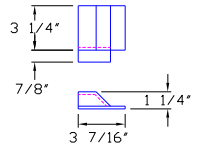	• 26 Ga. Material	• Closes rake trim at high eave corner
Rib Concealing Corner Trim	TE91	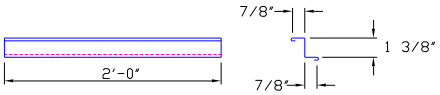	• 26 Ga. Material	• Intersection point of rib concealing gutter and rake trim. (Field cutting is required)
4" Downspout	TM6	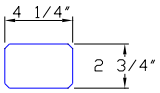	• 29 Ga. White • 10'-0" Length	• With gutters TE11-20 and TE89-20
4" Elbow	TM7	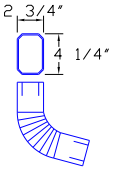	• 29 Ga. White • Type "A" • 75 Degrees	• Used with 4" downspout
Downspout Strap	MS19	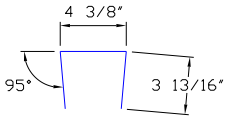	• 26 Ga. Material	• Used with 4" downspout
5" Downspout	TM86	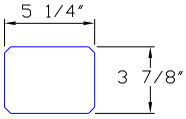	• 26 Ga. Material • 10'-0" Length • 4" x 5"	• Used with Gutter TE25-20
5" Elbow	TM87	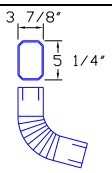	• 26 Ga. Material • Type "A" • 4" x 5" • 75 Degrees	• Used with 5" downspout
Downspout Strap	MS26	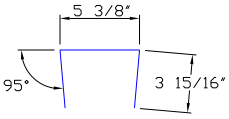	• 26 Ga. Material	• Used with 5" downspout

08/03/2026

The trims shown below are only available from the Sarasota, FL plant location only.

TITLE	PART NO.	PROFILE	DESCRIPTION	WHERE USED
Rake Trim	RT-1	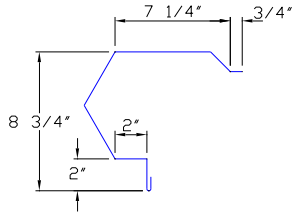	• 26 Ga. Material • 20'-3" Length	• Along endwall rake
Peak Flashing	PKB1	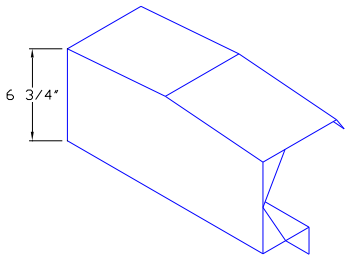	• 26 Ga. Material	• At peak on gabled buildings.
Eave Trim/Eave Flashing	ET1	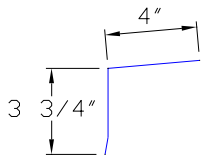	• 26 Ga. Material • 20'-3" Length	• Along low eave
High Eave Trim	HET100	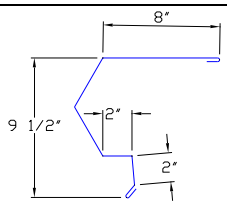	• 26 Ga. Material • 20'-3" Length	• Along high eave
Standard Gutter	GUR1	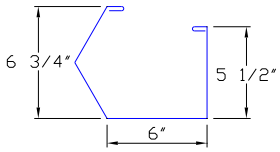	• 26 Ga. Material • 20'-3" Length	• Along low eave
High Capacity Gutter	GUR2	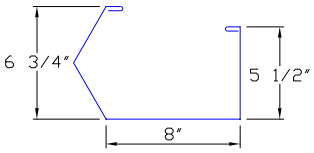	• 26 Ga. Material • 20'-3" Length	• Along low eave
Std. LH Gutter End Cap	GUR1L	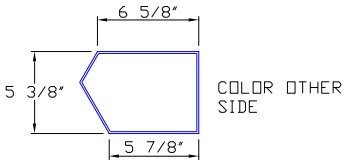	• 26 Ga. Material	• Used on left-hand end of gutter GUR1
Std. RH Gutter End Cap	GUR1R	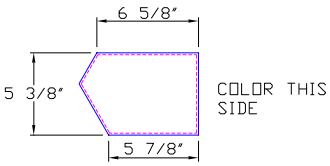	• 26 Ga. Material	• Used on right-hand end of gutter GUR1

H.C. LH Gutter End Cap	GUR2L	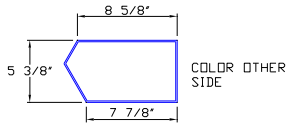	• 26 Ga. Material	• Used on left-hand end of gutter GUR2
H.C. RH Gutter End Cap	GUR2R	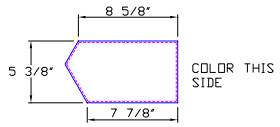	• 26 Ga. Material	• Used on right-hand end of gutter GUR2
Gutter Hanger Strap	GURH	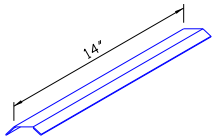	• 26 Ga. Material	• Along low eave gutters GUR1 and GUR2
5" Downspout	DS1	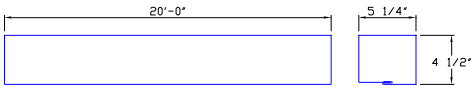	• 26 Ga. Material • 20'-0" Length	• Used with GUR1
	DS1KO	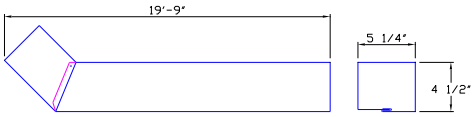	• 26 Ga. Material • 19'-9" Length	• Used with GUR1
5" Elbow	DS1ELB	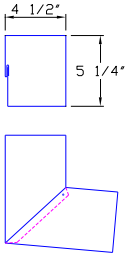	• 26 Ga. Material • 95 degrees	• Used with DS1
5" Downspout Strap	DS1STR	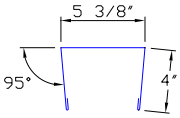	• 26 Ga. Material	• Used with 5" downspouts
6" Downspout	DS2	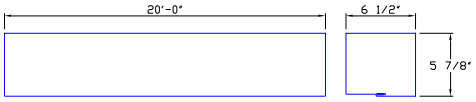	• 26 Ga. Material • 20'-0" Length	• Used with GUR2
	DS2KO	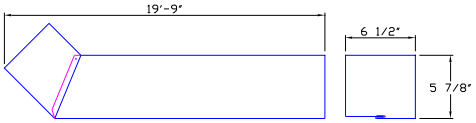	• 26 Ga. Material • 19'-9" Length	• Used with GUR2
6" Elbow	DS2ELB	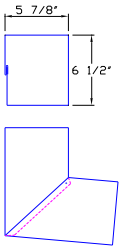	• 26 Ga. Material • 95 degrees	• Used with DS2
6" Downspout Strap	DS2STR	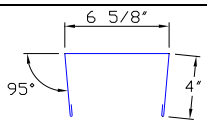	• 26 Ga. Material	• Used with 6" downspouts

3.B HANDLING LONG TRIM

When removing long trim from the shipping crate and during installation, care should be taken to avoid damage caused by buckling. Lift with two or more people, do not pick trim up by ends.

3.C PROTECTIVE FILM REMOVAL

Trim components produced at the Columbus plant include a protective film on the colored surface that must be removed prior to installation. Trim components produced at the Sarasota plant do not include this protective film.

Prolonged exposure (more than 3 weeks) to rain and/or sunlight will adversely affect the protective film, making removal more difficult.

It is the responsibility of the builder to verify the presence of protective film and ensure timely removal where applicable to avoid installation or finish issues.

REMOVAL INSTRUCTIONS

When film is being removed from trim having a hem along its edge, the film should be peeled off along the entire end. This includes the hemmed area, on the back side. Pull the entire film strip at a constant rate. Do NOT try to rip the film off as it will tend to tear at the hemmed edge and corners leaving a strip that will have to be removed separately.

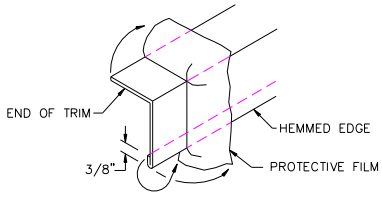

ILLUS. 3.1 REMOVING FILM

3.D TOUCH-UP PAINT

With continued improvements to painted material applications and color matching methods via paint retailers, scanning a color sample is one of the fastest ways to arrive at the correct matched touch-up paint color for Behlen Building Systems sheeting or trim.
Be certain to request an appropriate high performance acrylic / direct-to-metal base for the color match paint. A Sherwin Williams recommended base noted below. Also indicate to your paint retailer that the touch-up paint will be applied to either a Fluropon 70% PVDF or a Silicone Modified Polyester (SMP) finish. Reference your Behlen Buildings Systems drawings cover page for color name and cross reference with your Behlen color chart as necessary to confirm finish type. Note, for a proper color scan and match, the paint sample must physically be a metal sample of painted material. DO NOT USE the Behlen color chart for scanning paint color match.
If the local retailer is a Sherwin Williams® dealer, an alternate way of arriving at a color match other than scanning can be achieved as follows: Use the Sherwin Williams® Codes noted below and advise paint retailer of your SHER-COLOR request utlizing the appropriate base option. These bases can be tinted to light and dark colors. Copies of these base specifications noted below.

USE SHER-CRYL HPA (HIGH PERFORMANCE ACRYLIC) or PRO_INDUSTRIAL_DTM ACRYLIC_SEMIGLOSS.

Sherwin Williams® Fluropon 70% PVDF Colors Only

Charcoal (432R1065)	Natural Evergreen (435RZ263)	Patrician Bronze (437R813)
Regal Blue (436RZ1100)	Regal White (431A886)	Surrey Beige (433B365)
Regal Red (434A986)	Matte Black (438R462)	

Sherwin Williams® Silicone Modified Polyester Colors Only

Polar White (WXW0049L)	Ash Gray (WXA0092L)	Saddle Tan (WXD0046L)
Light Stone (WXD0038L)	Burnished Slate (WXB1007L)	Hawaiian Blue (WXL0027L)
Rustic Red (WXR0077L)		

If the local retailer is not a Sherwin Williams® affiliate or the color you are trying to match is not available with an SW paint color code, please have them scan your metal paint sample to arrive at approriate color formula. Feel free to share with the retailer the Sherwin Williams recommended bases for use in arriving at a comparable/equivalent type for the brand paint your retailer offers.

GENERAL NOTES: Touch-up paint should be use sparingly and only to cover up areas where the paint has been removed. Areas to be touched up should be wiped with diluted mineral spirits to remove dirt, wax and other contaminants then lightly sanded by using 3M block (medium grit) to roughen the painted surface adjacent to the scratched area before colored touch-up paint is applied.
Aerosal or spray applications are not recommended for blemish or scratch repairs. The best tool for this type of repair is a high quality small bristle or foam brush.

SPECIAL NOTE: Touch-up paints are an air-dry system and application unlike the original color application to the base metal. As such, differential fading and/or color mismatch can develop over long periods of time due to general weathering and UV exposure of the touch-up area compared to the balance of the painted panel surface. A re-touch of the area may be required based on a current color match at that time.

4 FASTENERS

4.A IDENTIFICATION AND USAGE

The information presented herein is provided as a supplement to the job erection drawings and is typical for most buildings. Variations may occur because of special building requirements. Always refer to the job erection drawings which will govern specific part and assembly arrangements and applicable illustration details.
Fasteners will be identified by a “label” or circle with a numerical number inside of it. These labels and numbers will correspond to the ID number in the FASTENER SCHEDULE in the job erection drawings.

STITCH SCREW

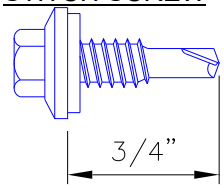

ILLUS. 4.1 STITCH SCREW

Label
②
Part Number
(Plated) 3228100
(Colored) 3228100_ _
Code

Description
Screw 1/4” x 3/4” FL-TP SD WW
Self-Drilling screw with a flat-top under cut 5/16” hex head and EPDM sealing washer

Applications:
Downspout strap to wall and downspout
Downspout splice

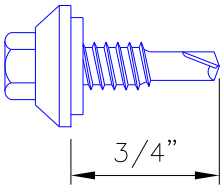

ILLUS. 4.2 STITCH SCREW

Label
⑫

Part Number
(Plated) 3228103
(Colored) 3228103_ _
Code

Description
Screw 1/4” x 3/4” LG-LF SD WW
Self-Drilling screw with a long life 5/16” hex head and EPDM sealing washer

Applications:
All roof panel sidelaps
Rake trim sidelap to adjacent roof panel.

TRIM SCREW

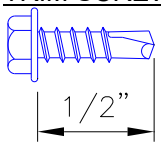

ILLUS. 4.3 TRIM SCREW

Label
⑥

Part Number
(Plated) 3228099
(Colored) 3228099_ _
Code

Description
Screw #8 x 1/2” HWH SD NW
Self-drilling screw with a 1/4” hex head and no washer.

Applications:
Splices on gutter, eave trim and rake trim.
Attaches gutter endcaps, corner caps and outside corner boxes.

STRUCTURAL SCREWS

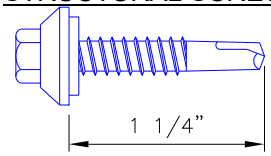

ILLUS. 4.4 STRUCTURAL SCREW

Label
⑬

Part Number
(Plated) 3228105
(Colored) 3228105_ _
Code

Description
Screw 1/4" x 1 1/4” LG-LF SD WW
Self-Drilling screw with a long life 5/16” hex head and EPDM sealing washer

Applications:
To attach roof panels to secondary members.

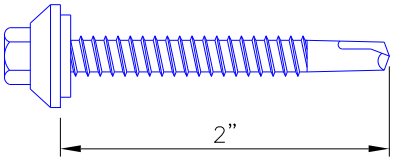

ILLUS. 4.5 STRUCTURAL SCREW

Label
㉔

Part Number
(Plated) 3228043
(Colored) 3228043_ _
Code

Description
Screw #12 x 2” LG-LF SD WW
Self-Drilling screw with a long life 5/16” hex head and EPDM sealing washer

Applications:
To attach roof panels that overlaps 6” thick insulation to secondary members.

4.B FASTENER PATTERNS

1. Structural screw patterns for PBR roof panels.

Use the pattern (BELOW) at the following location:

- NON UL90 and UL90 Roof panel to purlins

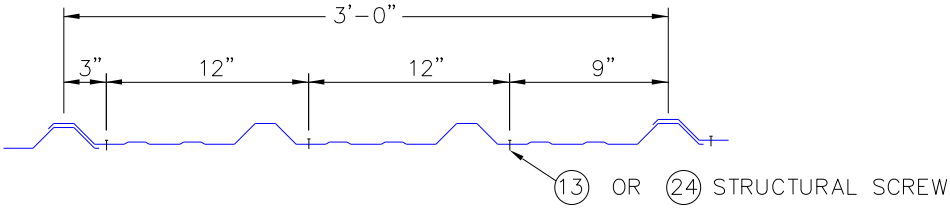

ILLUS. 4.6 SCREW PATTERN FOR PBR ROOF PANEL

Use the pattern (BELOW) at the following location:

- ALL Roof panel to eave strut
- ALL Roof panel endlaps
- ALL Roof panel ridge cap endlaps

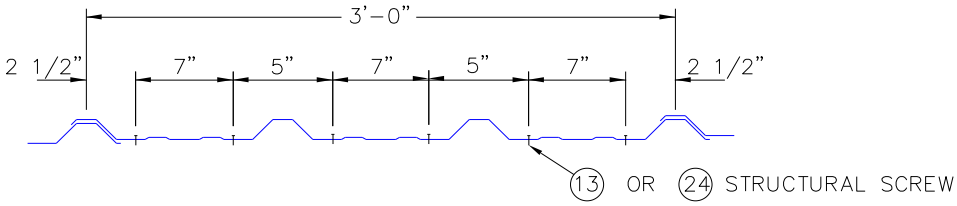

ILLUS. 4.7 SCREW PATTERN FOR PBR ROOF PANEL

2. Stitch screw patterns for PBR roof panels.

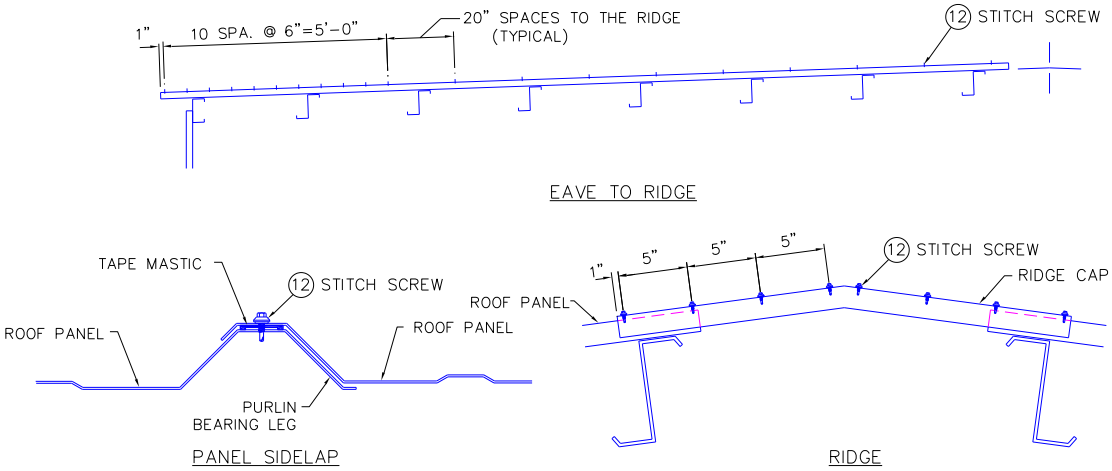

ILLUS. 4.8 SCREW PATTERN FOR PBR ROOF PANEL SIDELAPS

The sidelap of PBR roof panels should be constructed in the field so that the purlin bearing leg is on the inside of the building.

4.C SEATING OF FASTENERS

When using any self-drilling screw, apply sufficient torque to seat the washer correctly. Do not overdrive the fastener.

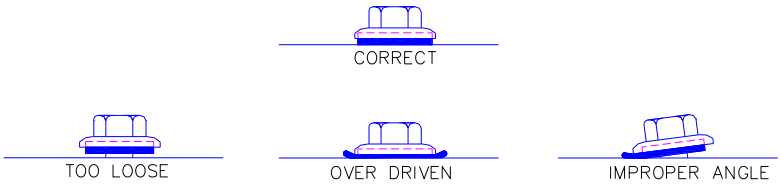

ILLUS. 4.9 SEATING FASTENERS

4.D TROUBLE SHOOTING GUIDE

The following information is designed to assist you in correcting problems that may be encountered while installing the self-drilling screws. Listed below are some potential problems, causes and solutions.

1. PROBLEM: Rounding off hex head.

CAUSE	SOLUTION
Improper socket to hex contact. 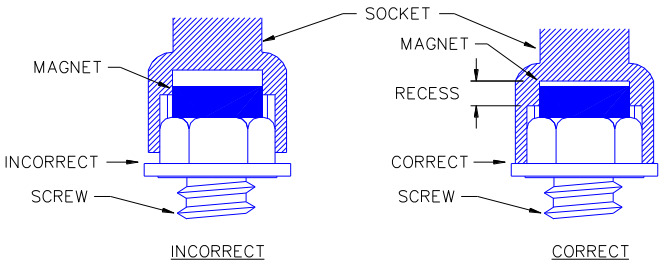	Set the proper magnet depth by using a screw and hammer to drive the magnet further into the recess of the socket. 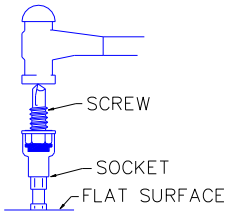
Improper engagement of socket to hex head. 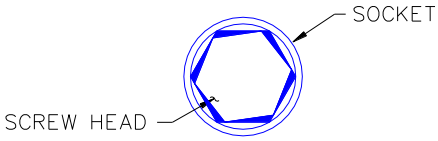	Replace socket with new one which has the new “lobe design” which provides a positive grip while contacting less surface to protect painted heads. Available at Behlen Mfg. Co. 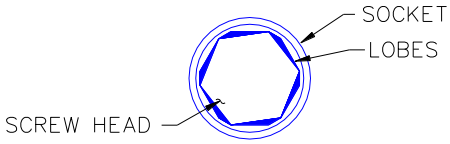
Build-up of metal shavings in socket. 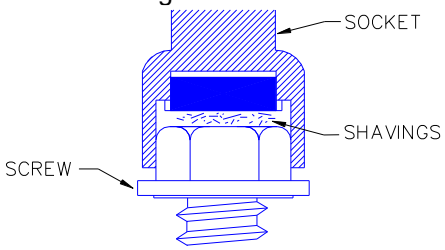	Use a small plug of tape mastic to remove metal shavings.
Socket is worn causing screw to wobble.	Replace socket with new one.
Socket size does not fit approximately to screw head.	Check whether a 5/16” hex or 3/8” hex is being used.

08/03/2026

2. PROBLEM: Burning off or rounding of drill point.

CAUSE	SOLUTION
Forcing screw in by applying too much pressure.	Allow the drill point to do work.
Not keeping fastener perpendicular to surface being drilled. 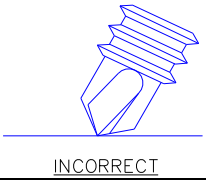	Reposition screw/screw gun into a vertical position. 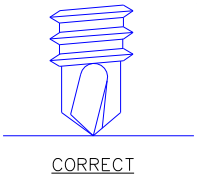
Incorrect drill point of material thickness being drilled.	Check the size/part number of screw being used with erection information supplied with job.
Improper speed (RPM) of screw gun.	Use 1800 RPM screw gun for best results.
Installing a self-drilling screw into a pre-drilled hole. The cutting surface of the screw will be blunted by the edge of the material. 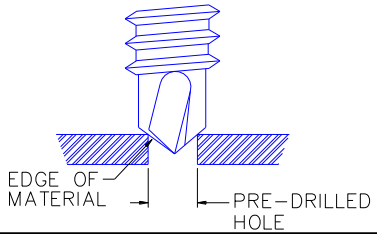	Allow the screw point to drill hole with entire drill point cutting surface. 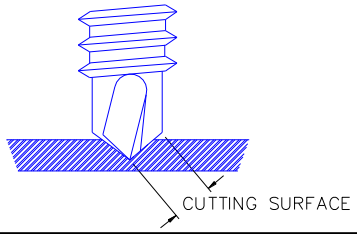

3. PROBLEM: Head separation (Head popping off)

CAUSE	SOLUTION
Incorrect application for screw. Stitch screw used in structural application.	Check the size/part number of screw being used with erection information supplied with job.
Over-torquing the screw.	Use depth sensing nose piece to allow proper seating of fastener.

4. PROBLEM: Head shavings on panel, causing red rust and corrosion.

CAUSE	SOLUTION
Steel body screws become magnetized by magnetic socket insert, metal shavings attach to screw and spin onto panel.	Remove build-up of metal shavings in socket so that metal chips will come off the panel and adhere to the socket when screw gun is withdrawn.
The act of installing screws causes metal shavings to lay on surrounding panel surface. 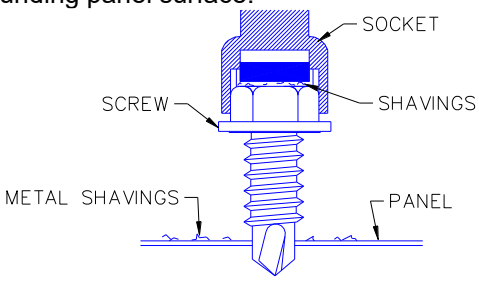	Blow off loose shavings or use soft cloth to gently wipe off shavings from panel surface.

5 MASTICS

5.A TAPE IDENTIFICATION AND USAGE

A non-hardening “Butyl” tape mastic is supplied in rolls. Always refer to the job erection drawings, which will govern, if any special tape mastic size or placement is required.

TAPE MASTIC

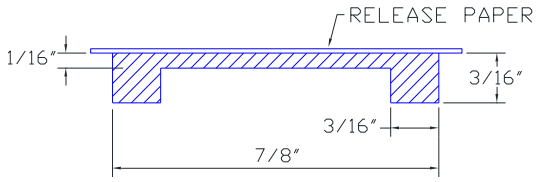

Label

51

Part Number
3209120

APPLICATIONS

- Sidelaps of adjacent roof panels
- Sidelap of rake trim and adjacent roof panel
- On top and bottom of foam closures along low eaves and high eaves
- Roof panel endlaps
- Endlaps of ridge cap and roof panel
- Translucent skylights

5.B GUN GRADE IDENTIFICATION AND USAGE

Tubes sealant is supplied on frame buildings.
Always refer to the job erection drawings, which will govern, if any special gun grade mastic or placement is required.

GUN GRADE MASTIC

Label

52

Part Number
3288023

APPLICATIONS

- Gutter endlaps and at endcaps
- Eave trim endlaps (low eave)
- High eave trim endlaps
- Corner caps and outside corner boxes
- Rake trim endlaps
- At peak

6 BEGINNING ERECTION

6.A ALIGNING PURLINS

Due to the tendency of purlins to roll and their flexibility in the lateral direction, it will be necessary to maintain purlin alignment and spacing. Use temporary strapping or blocking at mid bay along tops of purlins prior to attaching roof covering.

SAFETY PRECAUTION:
Roof purlins and eave struts are unstable and subject to twist prior to installation of roof covering. Use approved tie offs, netting and rails when working on roof surfaces.

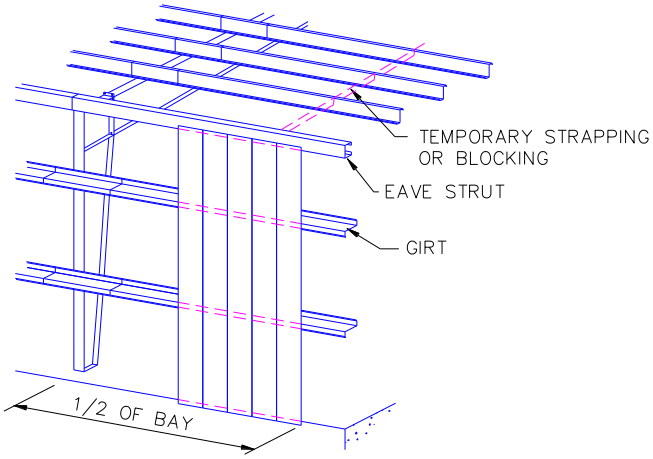

ILLUS. 6.1 TEMPORARY BLOCKING

6.B BLANKET INSTALLATION

The proper location and installation of blanket insulation and its vapor retarder (facing) is important to ensure the performance of the vapor retarder. Insulation types & installation methods are not the responsibility of Behlen building systems. Reference the installation guidelines provided by your insulation supplier for system specific requirements. Below is strictly a general guideline for one type of single layer insulation system simply applied over the purlins and compressed by the roof panel.

1. Insulation is unrolled with the facing to the inside or warm side of the insulation surface of the building.
2. Any small holes or tears in the facing should be repaired as they will allow moisture to penetrate into the insulation.
3. Insulation seams are sealed by pulling and adjoining facing tabs upwards at the joint, aligning the top edges of the tabs and bound together via adhesive or staples at approx. 12” centers (see ILLUS. 6.2). Fold the tab over again and staple at 4” centers (see ILLUS. 6.3).

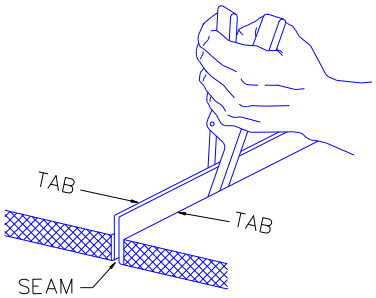

ILLUS. 6.2 STEP NO. 1

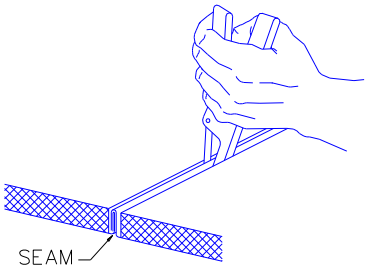

ILLUS. 6.3 STEP NO. 2

4. This seam can be further sealed with a strip of tape.

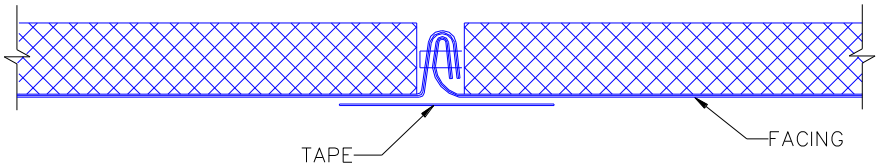

ILLUS. 6.4 (OPTIONAL) TAPED JOINT

5. If the roll of insulation is not long enough, and an end splice is necessary, strip insulation back 2” from the facing forming a tab on each end. Bind ends together as shown in ILLUS. 6.2, then fold again at 4” centers (see ILLUS. 6.3). Optional taped joint can be used (see ILLUS. 6.4).
   The end splice should be made directly over a purlin flange.
6. During erection, when necessary, fold and tape the facing at the end of the blanket to prevent absorbing excessive moisture (see ILLUS. 6.6). On insulation thickness greater than 3”, some insulation should be stripped off before folding facing over (see ILLUS. 6.5).

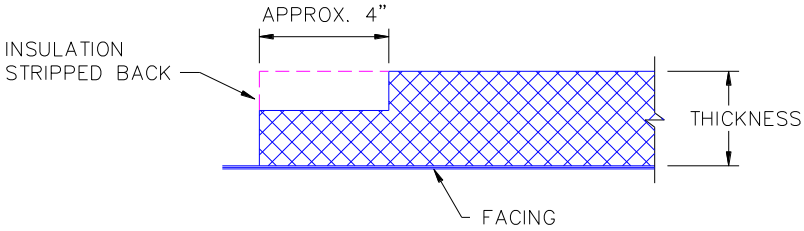

ILLUS. 6.5 REMOVE INSULATION

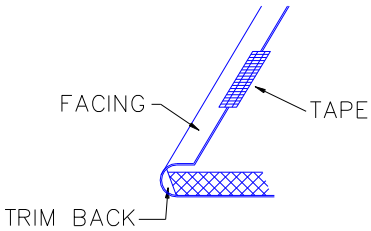

ILLUS. 6.6 FOLD & TAPE FACING

7. Prior to placing insulation on the roof, eave trim or eave flashing should be in place.

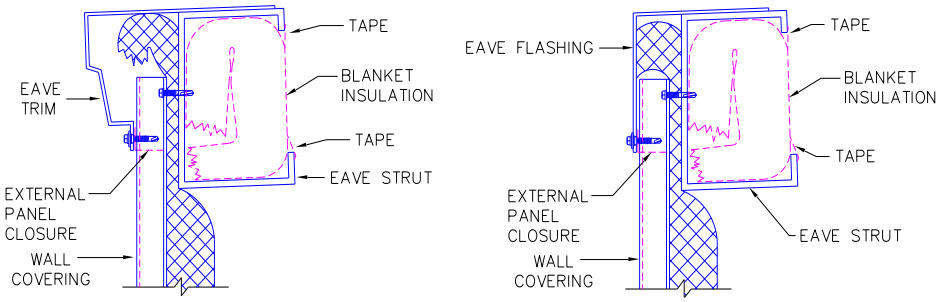

ILLUS. 6.7 TRIM ALONG EAVE IS IN PLACE

8. Starting at one corner of the building, unroll the insulation from the eave strut up and over the ridge and down the eave strut on the opposite side, positioning the width so that it overhangs the rake by approx. 2".

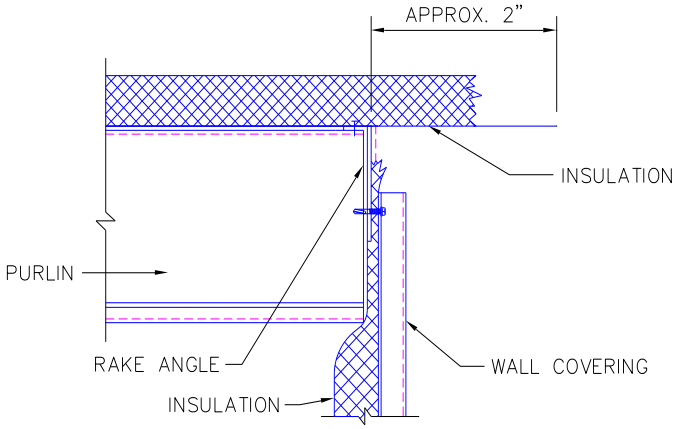

ILLUS. 6.8 INSULATION ALONG RAKE

9. While positioning insulation along the rake, care must be taken to insure that the first run of insulation is placed square to the endwall because this roll determines the speed and neatness with which succeeding rolls may be placed.
   After the first roll is correctly positioned, cut insulation from facing and fold facing over along the eave. Attach at eave with double-sided tape.

CAUTION:
The blanket insulation must not interfere with the tape sealant and closures that will be placed along the eave. Maintained a 1" minimum set-back.

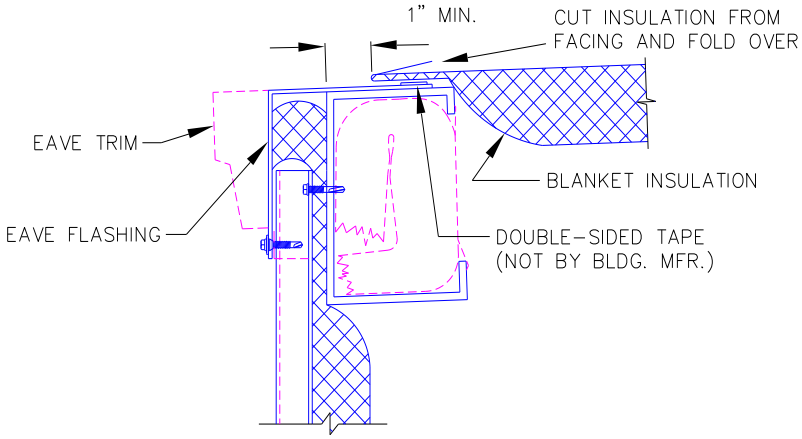

ILLUS. 6.9 ROOF INSULATION AT EAVE

08/03/2026

10. Tension the insulation to provide a taut, smooth inside surface. Once the insulation is correctly positioned and tensioned, roof sheeting can start. All other runs of insulation may be installed in the same manner. The first run of insulation will be taped to insulation on the endwall.

SAFTEY PRECAUTION:
Insulation has no bearing strength. Maintain body weight on approved scaffolding or roof panels. Do not stand or step on leading unsupported edges or roof sheeting.

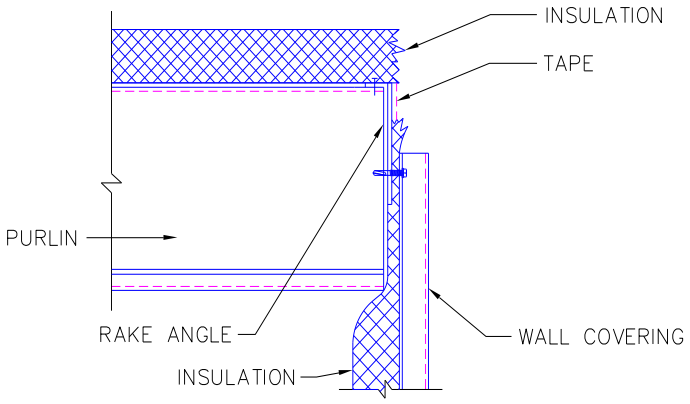

ILLUS. 6.10 FIRST RUN OF INSULATION AT ENDWALL

6.C ERECTION SEQUENCE

Proper and careful erection of the covering and trim play a most important part in the look and integrity of the complete structure. The following items should be verified before placement of roof covering.

1. The building should be square and plumb.
2. Wall covering is in place.
3. X-bracing in the roof must be installed and tensioned.

Field cutting of panels and trim should be avoided where possible. If field cutting is required, the panel or trim component must be cut with nibblers, snips or shears to prevent edge rusting. Do not cut components with saws, abrasive blades, grinders or torches.

CAUTION: Any metal component should be cleaned of any drill shavings at the end of each day to prevent rust.

The following erection sequence contains the most pertinent aspects of PBR roof covering installation. Refer to the job erection drawings at all times for specific information and details.

Note: This installation manual is intended for the use of general installation, layout and product applications. Trim conditions and trim profiles may vary from those shown dependent on material sourcing and job specific conditions. Reference erection drawings for additional project requirements as needed.

7 INSTALL EAVE TRIM (LOW EAVE)

7.A POSITIONING AND STARTING AT CORNER

To insure proper alignment of eave trim, stretch a string line from corner to corner and pop a chalk line.

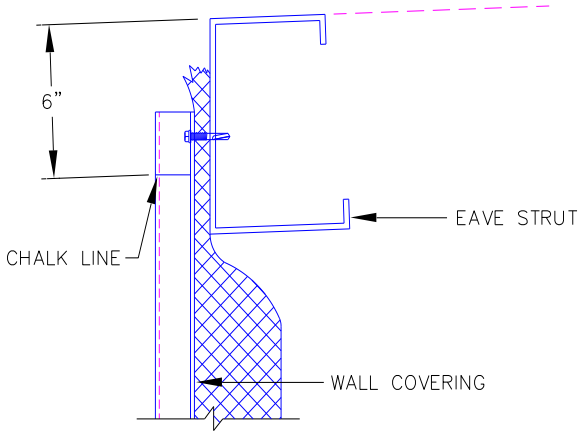

ILLUS. 7.1 MARK CHALK LINE ALONG EAVE

Begin eave trim flush with edge of outside corner trim.

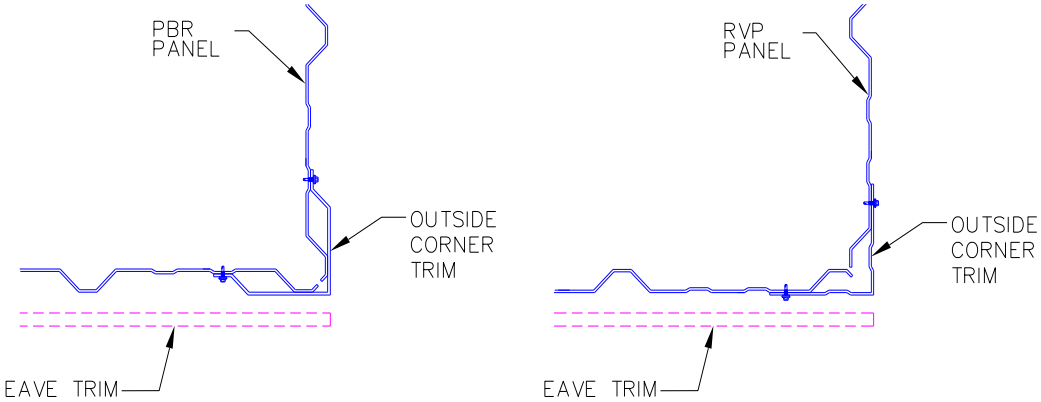

ILLUS. 7.2 BEGIN EAVE TRIM AT CORNER

Place the outside edge of the eave trim over the eave strut and position using dimensions in TABLE A then temporarily hold in place with a structural screw. Using these dimensions will keep the front face of the eave trim 90 degrees to the roof surface, thus assuring that the outside corner boxes will fit properly at the corners.

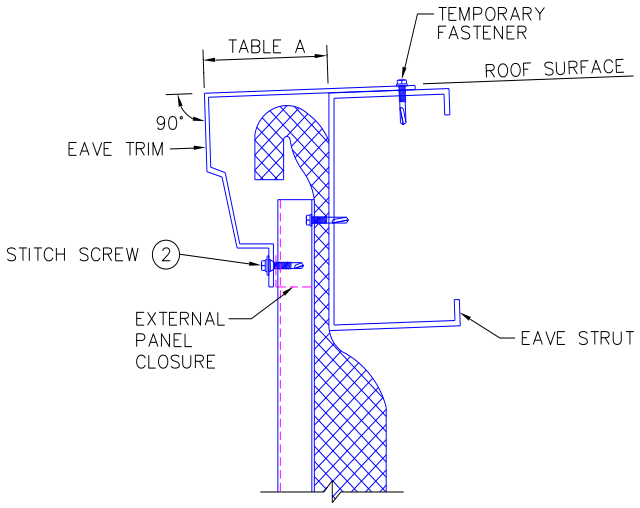

ILLUS. 7.3 POSITIONING EAVE TRIM

TABLE A (DIMENSIONS)	
ROOF SLOPE	PBR or RVP WALL PANELS
1/2” to 12”	3 5/8”
1” to 12”	3 7/8”
1 1/2” to 12”	4 1/8”
2” to 12”	4 5/16”
3” to 12”	4 5/8”
OTHERS	SEE PLANS

Position the bottom edge of the eave trim along the chalk line. Insert coped flashings between eave trim and wall panel, then secure the trim to the wall panels at 12” centers for PBR walls or 6” centers for RVP walls.

7.B SPLICING EAVE TRIM

Install and align all other eave trim sections in the same manner allowing a minimum 2” lap. Each lap will contain (4) trim screws and gun grade mastic.

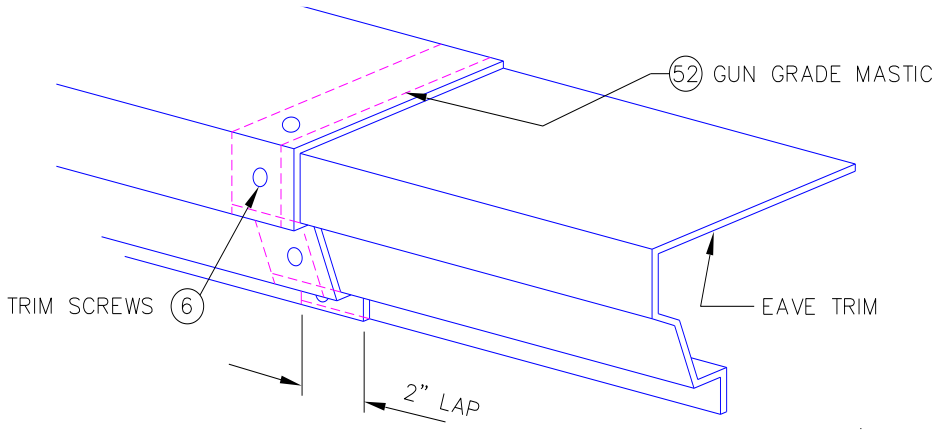

ILLUS. 7.4 SPLICING EAVE TRIM

8 INSTALL EAVE FLASHING (USED BEHIND GUTTER)

On buildings with gutter the eave flashing must be installed first.
The gutter system is to be installed after the roof covering is in place.

8.A POSITIONING AND STARTING AT CORNER

To insure proper alignment of eave flashing, stretch a string line from corner to corner and pop a chalk line.

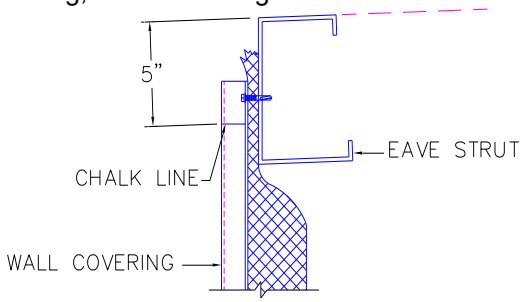

ILLUS. 8.1 MARKING CHALK LINE ALONG EAVE

Begin eave flashing flush with edge of outside corner trim.

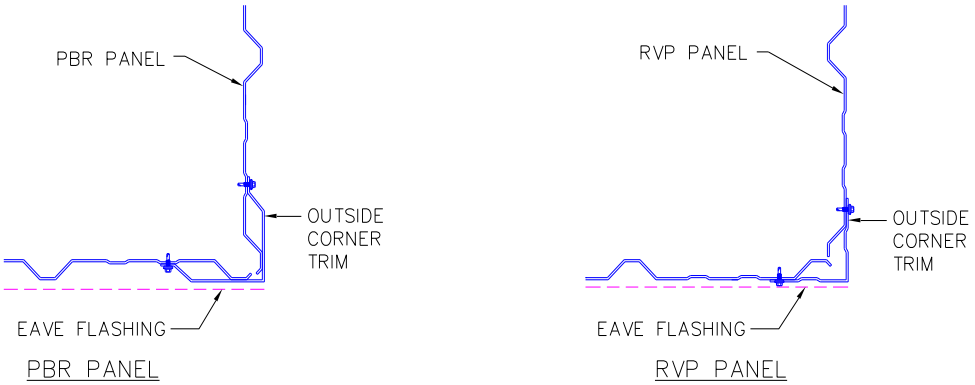

ILLUS. 8.2 POSITION EAVE FLASHING

Place the outside edge of the eave flashing (___ inches) from eave strut (SEE TABLE B) and temporary hold in place with a structural screw.

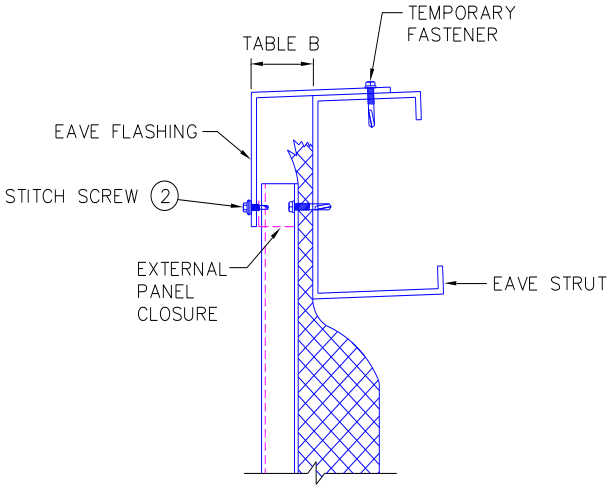

TABLE B (DIMENSIONS)	
ROOF SLOPE	ADP-1 or ADP-2 WALL PANELS
1/2” to 12”	1 1/2”
1” to 12”	1 1/2”
1 1/2” to 12”	1 1/2”
2” to 12”	1 9/16”
3” to 12”	1 9/16”
OTHERS	SEE PLANS

ILLUS. 8.3 POSITIONING EAVE FLASHING

Position the bottom edge of the eave flashing along the chalk line. Insert coped flashings between eave flashing and wall panel, then secure the trim to the wall panels at 12” centers for PBR walls or 6” centers for RVP walls.

8.B SPLICING EAVE FLASHINGS

Install and align all other eave flashing sections in the same manner allowing a minimum 2” lap. Each lap will contain (4) trim screws and gun grade mastic.

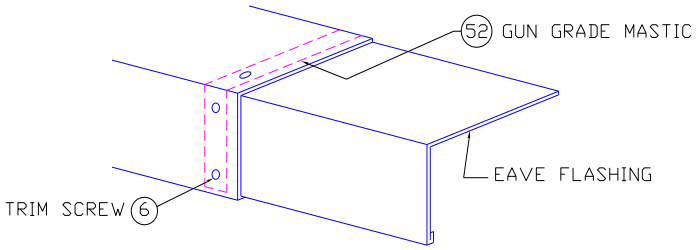

ILLUS. 8.4 SPLICING EAVE FLASHING

9 ROOF PANEL INSTALLATION

The following erection sequence contains the most pertinent aspects of roof covering installation. Refer to the job erection drawings at all times for specific information and details.

1. Cleaning metal chips from panels
2. Sheeting direction and panel module
3. Locating first panel at eave
4. Installing next panel upslope
5. Installing subsequent roof panels
6. Installing ridge caps

9.A CLEANING METAL CHIPS FROM PANELS

The act of installing self-drilling screws can produce hot metal chips on painted or bare panel surfaces that can literally melt into the panel coating causing them to become adhered to the panel. If these panels are not cleaned immediately, the potential for red rust to deface the panel is almost certain. Blow off loose shavings or use soft cloth to gently wipe off shavings from panel.

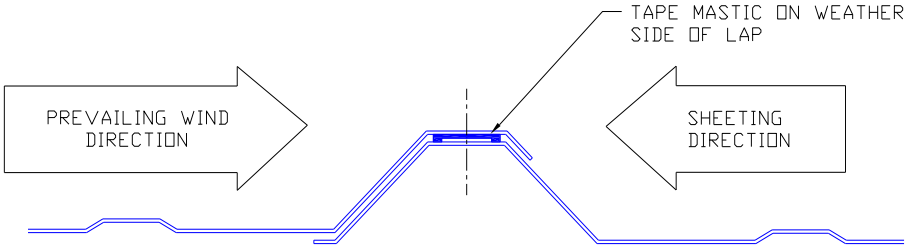

ILLUS. 9.1 PANEL SIDELAP

9.B SHEETING DIRECTION, HOLDING MODULE AND ROOF TRAFFIC

An important consideration in determining sheeting direction is keeping sidelaps facing away from the prevailing wind direction (see ILLUS. 9.1).
Hold panel module by checking the spacing of panels either by marking the frame work or pulling a tape measure periodically. If sheeting is getting out-of-module, correct the module as soon as possible.

> **CAUTION:** The roof may be sheeted one side at a time or both sides at once, but major corrugations must line up from one side to the other so that the ridge cap will fit.

When installing roof panels, caution should be used to avoid panel buckling along the panel edges and personnel slippage due to the lubricating oil used along the panel ribs during the rolling of galvalume panel. Avoid the oil especially in the morning or just after a rain. Water condensed on oils used in forming can be a hazard.
All workers should be tied-off to the rigid frames do not use the purlins to tie-off.

Roof sheets are designed to withstand normal roof traffic. Foot traffic should be confined to the “flat” of the panel and should not exceed 250 pounds over a one foot square area. No traffic should be allowed within one foot of the leading edge until the next panel is laid in place and the sidelap stitched. Without the adjacent panel reinforcing the rib, on both sides, unexpected buckling can initiate a fall.

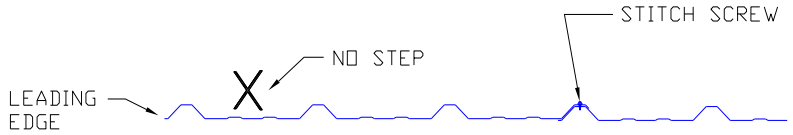

ILLUS. 9.2 AVOID PANEL EDGE

SAFTEY PRECAUTION
If oily or other slippery substances are spilled on the roof panels, wipe them off immediately to prevent slipping or falling. Workers should maintain a constant awareness of their location in relation to the roof edge when working on the roof.

9.C LOCATING FIRST PANEL AT EAVE

Once the first run of insulation and eave trim or eave flashing are in place (see ILLUS. 7.3 or ILLUS. 8.3) the foam closure and tape mastic should be positioned at the eave where the first panel run will be located.
The first panel may start AT THE RAKE or AWAY FROM THE RAKE by a “start dimension”. Start dimensions will be noted on the roof plan in the job erection drawings.

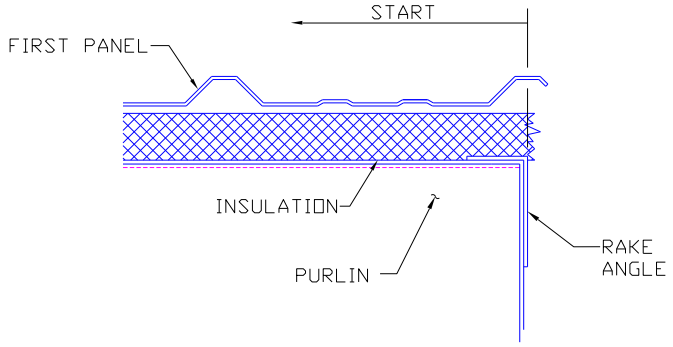

ILLUS. 9.3 PANEL STARTS AT RAKE

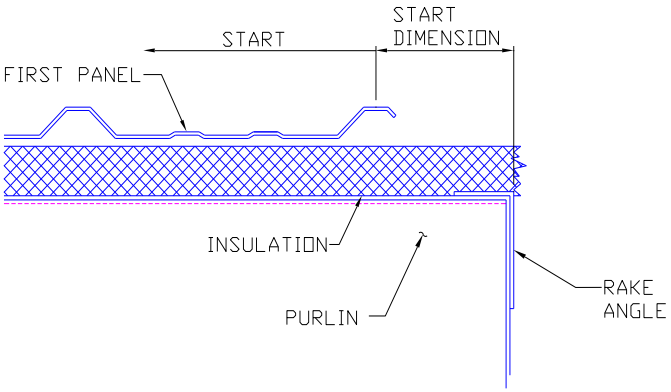

ILLUS. 9.4 PANEL STARTS AWAY FROM RAKE

Along the eave, at the location of the first panel run, the foam closure should be set on a line of tape mastic and then apply tape mastic over the top of the closure (see ILLUS. 9.5).

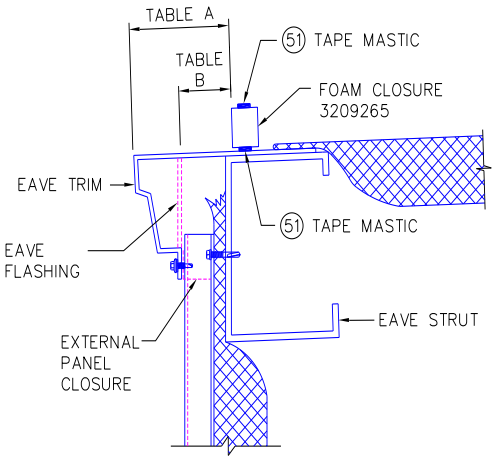

ILLUS. 9.5 LOCATING CLOSURE

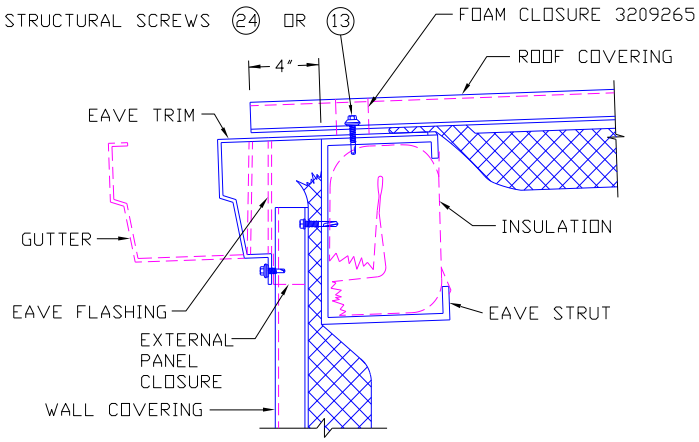

ILLUS. 9.6 POSITIONING PANEL

Next, position the panel so when it is laid in place, it will overhang the eave strut by 4” (see ILLUS. 9.6), unless indicated otherwise on the job erection drawings.
The starting point of the roof panel at the endwall rake will be as shown in ILLUS. 9.3 unless a “start dimension” is indicated on the roof plan in the job erection drawings.
Proper alignment before fastening will prevent an accumulative error as the roof sheeting progresses.

Once the first panel is correctly positioned, attach roof panel with structural screws to the eave strut (see ILLUS. 4.8) and applicable screw pattern shown in ILLUS. 4.6 or ILLUS. 4.8 at all purlins, except ridge purlin or where a panel endlap will occur upslope. When installing self-drilling screws drill shavings should be removed daily or humidity and rain will cause the shavings to rust and stain the panel surface.

> SAFTEY PRECAUTION
> Do not step on panel near the eave or the upper end without being tied-off and until fully secured by fasteners.

9.D INSTALLING NEXT PANEL UPSLOPE

Prior to placing the next panel "upslope", apply tape mastic to the upper end of the first panel as shown in ILLUS. 9.7. Then place the next panel "upslope" over the first panel forming a 6" endlap (see ILLUS. 9.8).

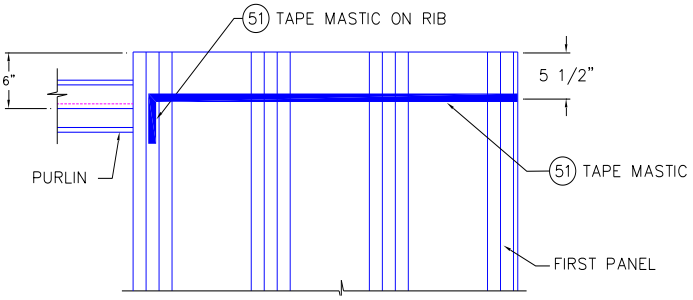

ILLUS. 9.7 MASTIC ON UPPER END OF PANEL

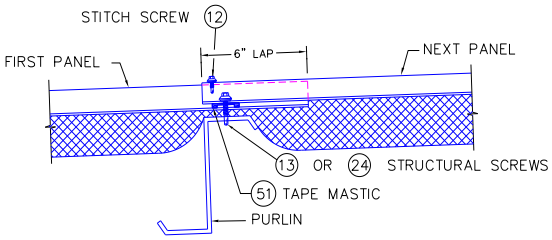

ILLUS. 9.8 ROOF PANEL ENDLAP

Fasten structural screws through the endlap in accordance with the screw pattern in ILLUS. 4.6 and into all other purlins in accordance with applicable screw patterns shown in ILLUS. 4.6 or ILLUS. 4.6.

At roof panel endlaps, three stitch screws will be used to stitch the major ribs on the sheets together (see ILLUS. 9.9).

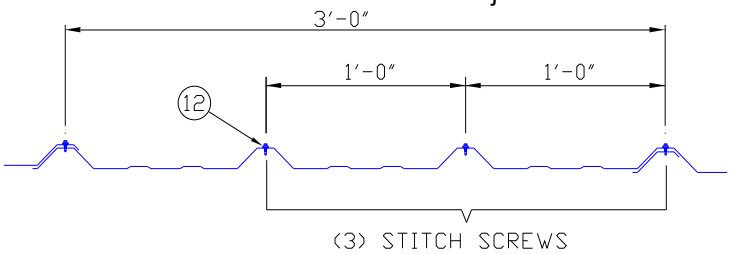

ILLUS. 9.9 STITCH SCREWS AT PANEL ENDLAP

Continue to place panels upslope until the ridge purlin or high eave strut is encountered. The upper end of the roof panel can be attached to an eave strut but if a ridge purlin is present the roof panel will be attached when the ridge cap is installed.

> SAFTEY PRECAUTION
> Do not step on panel near the end lap without being tied-off and until the fasteners are installed.

9.E INSTALLING SUBSEQUENT ROOF PANELS

Along the eave, install closure and tape mastic as shown in ILLUS. 9.5. Install tape mastic along the sidelap of the previous run of panels (see ILLUS. 9.10).

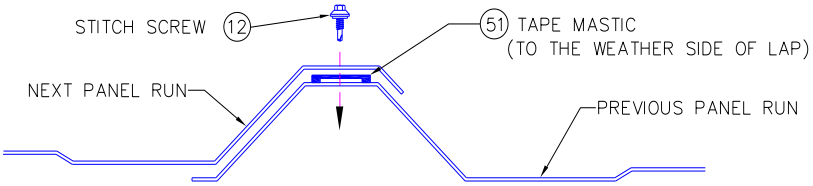

ILLUS. 9.10 STITCHING PANEL SIDELAP

Lay next panel down and stitch sidelap together with stitch screws at the spacing shown in ILLUS. 4.9. Secure panel at the eave strut (SEE ILLUS. 4.8) and applicable screw pattern shown in ILLUS. 4.6 or ILLUS. 4.8 at all purlins, except ridge purlin or where a panel endlap will occur upslope.
When installing self-drilling screws drill shavings should be removed daily or humidity and rain will cause the shavings to rust and stain the panel surface.
Prior to placing the next panel upslope, apply tape mastic to the upper end of the last panel laid (SEE ILLUS. 9.11). The proper placement of tape mastic at this (four corner) panel endlap is critical in providing a watertight roof.

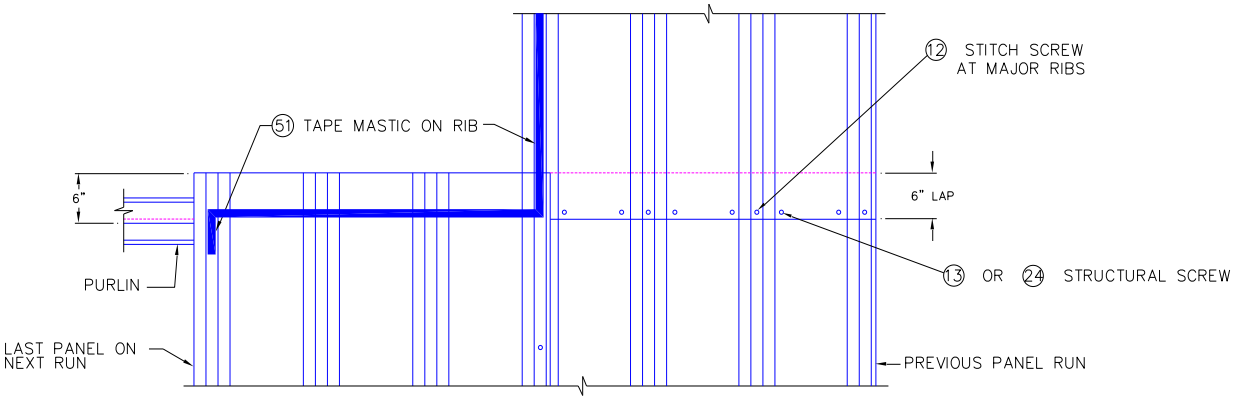

ILLUS. 9.11 FOUR CORNER PANEL ENDLAP

Lay the next panel into position (and all following panel runs) and faster as previously described.

9.F INSTALLING RIDGE CAPS

After roof panels have been placed on each side of the ridge, the ridge cap may be installed.

<u>SAFTEY PRECAUTION</u>:
Do not step on the end of the panel at the ridge without being tied-off and until secured by fasteners.

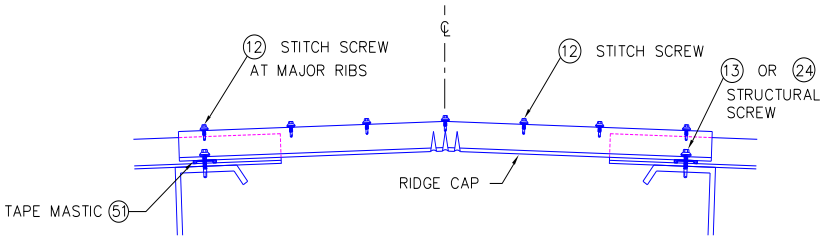

ILLUS. 9.12 INSTALLING RIDGE CAPS

Place tape mastic on the upper end of both roof panels as shown in ILLUS. 9.7.
Lay ridge cap on panels and attach to roof as shown in ILLUS. 4.8.
At the lap of the roof panel and ridge cap, install stitch screws at each major rib location as shown in ILLUS. 9.9.
For each succeeding ridge cap, place tape mastic as shown in ILLUS. 4.9.

NOTE: For the ridge cap to properly seal the alignment of the panels across the ridge can only be a maximum of 3/8” out of square/tolerance or the ridge panel will not seat/seal properly. DO NOT FORCE OR STRETCH the ridge caps if the panels are not aligned properly. Contact Behlen for alternate ridge assembly flashing / details and components for purchase. Installing the ridge improperly can result in the panels inability to seal and/or permit proper expansion/contraction at the ridge line resulting in damaged panel laps, screws backing out and overall ineffectiveness of the ridge installation.

10 RAKE TRIM

10.A POSITIONING RAKE TRIM

To insure alignment of rake trim sections, stretch a string line from the corner of the building to the ridge or high eave and pop a chalk line (SEE ILLUS. 10.1).

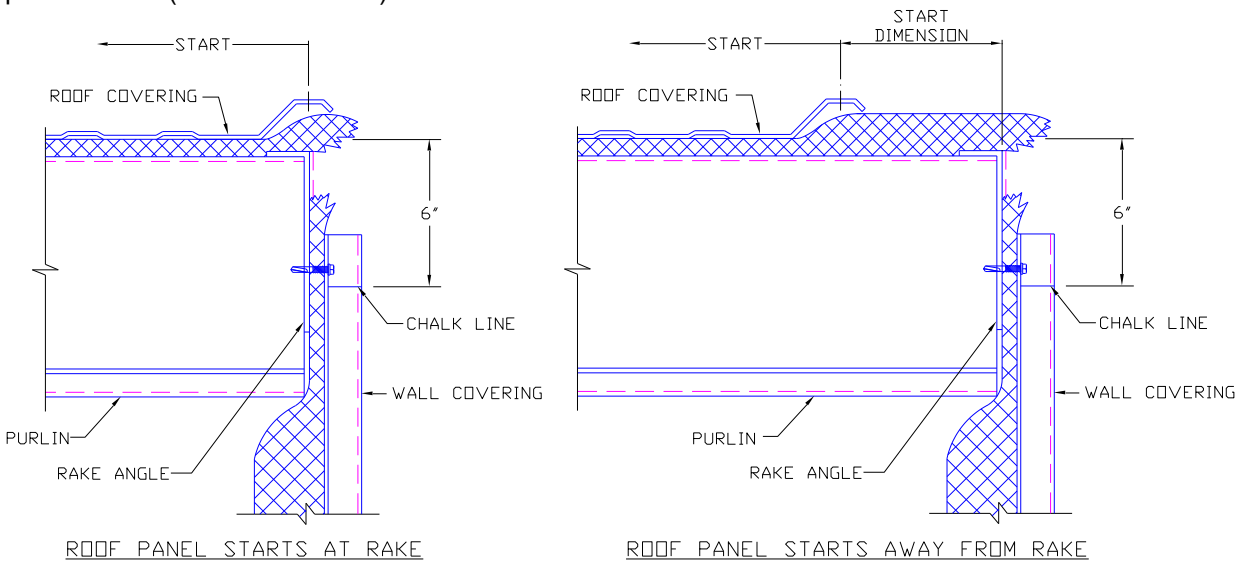

ILLUS. 10.1 MARKING CHALK LINE ALONG RAKE

Begin rake trim at the edge of the outside corner trim on the wall when the trim used along the eave is EAVE TRIM or the STANDARD SIZE gutter. When the eave has the HIGH CAPACITY gutter the rake trim should start at the end of the roof panel and the bottom lip be field notched to the edge of the outside corner trim (SEE ILLUS. 10.2).

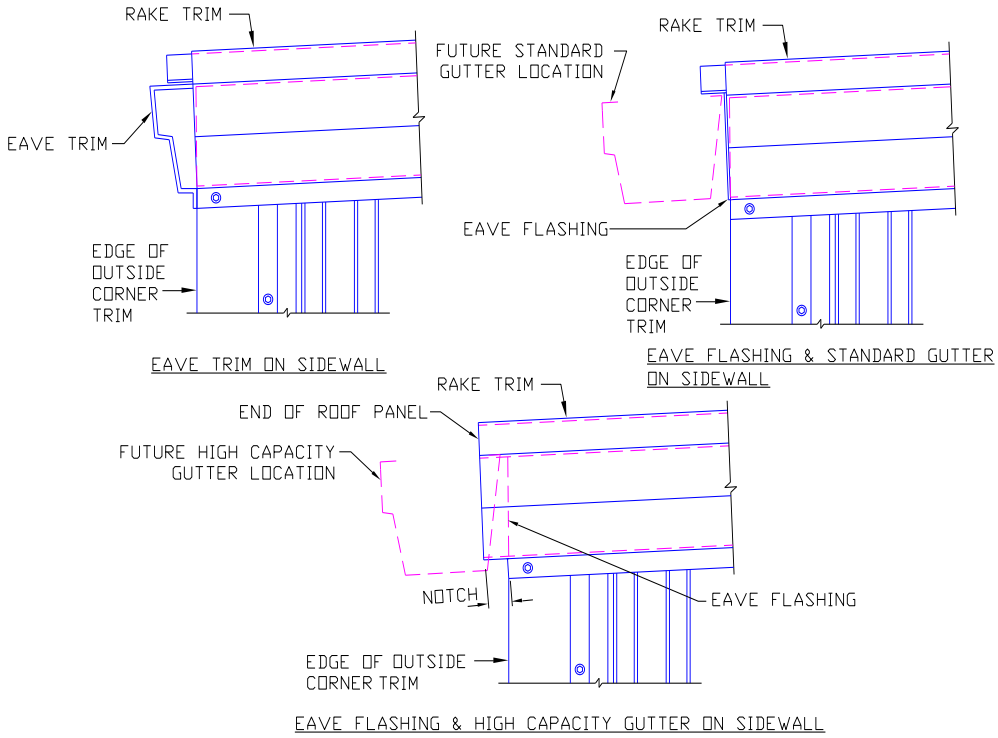

ILLUS. 10.2 BEGIN RAKE TRIM AT CORNER

Position tape mastic along the adjacent roof panel as shown in ILLUS. 10.3 and attach rake trim to roof panel with stitch screw pattern similar to that shown in ILLUS. 4.8.

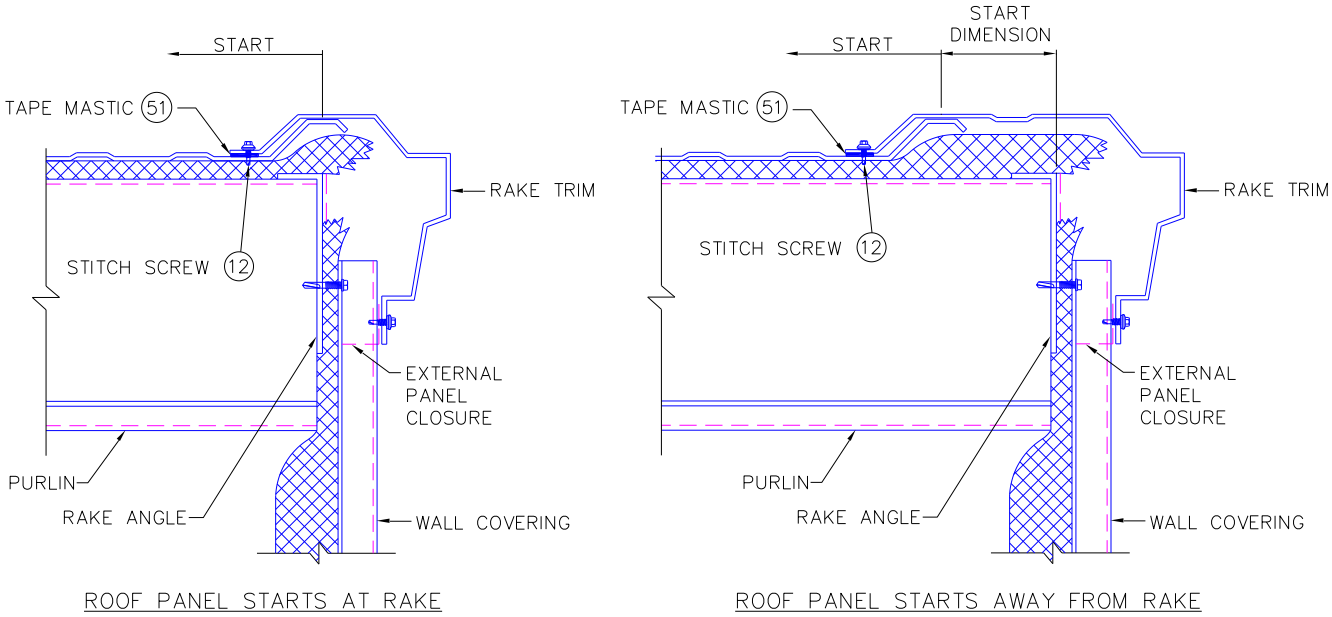

ILLUS. 10.3 INSTALL RAKE TRIM

Position the bottom edge of the rake trim along the chalk line. Insert coped flashings between rake trim and wall panel, then secure the trim to the wall panels at 12” centers for PBR walls or 6” centers for RVP walls.

10.B SPLICING RAKE TRIM

Install and align all other rake trim sections in the same manner allowing a minimum 2” lap. Each lap will contain either (7) trim screws if Standard rake trim is used or (8) if Oversized rake trim is used and gun grade mastic (see ILLUS. 10.4).

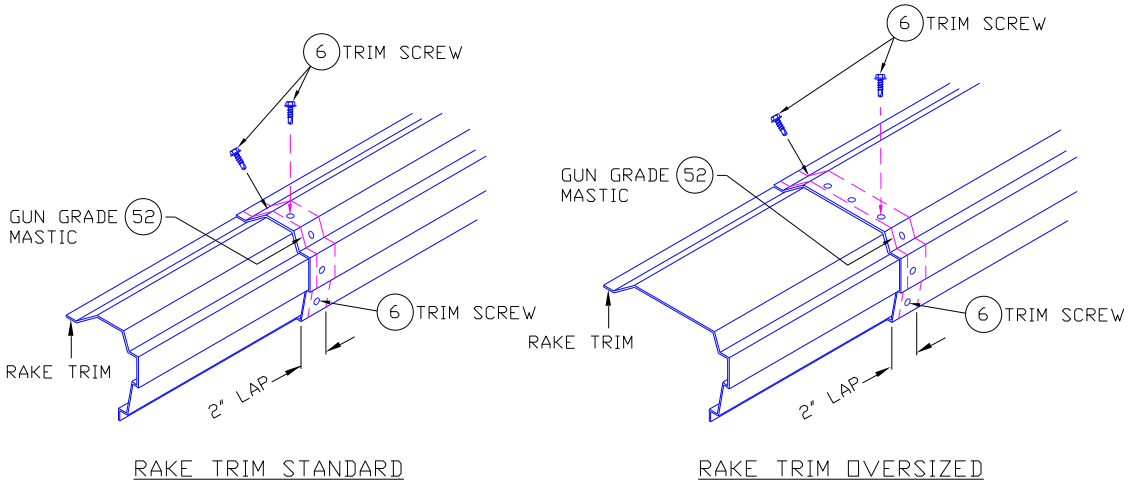

ILLUS. 10.4 RAKE TRIM ENDLAPS

10.C INSTALLING PEAK FLASHING AND SIGN

When rake trims meet at a ridge, field trimming will be required on buildings with roof slopes greater than 1” to 12”.

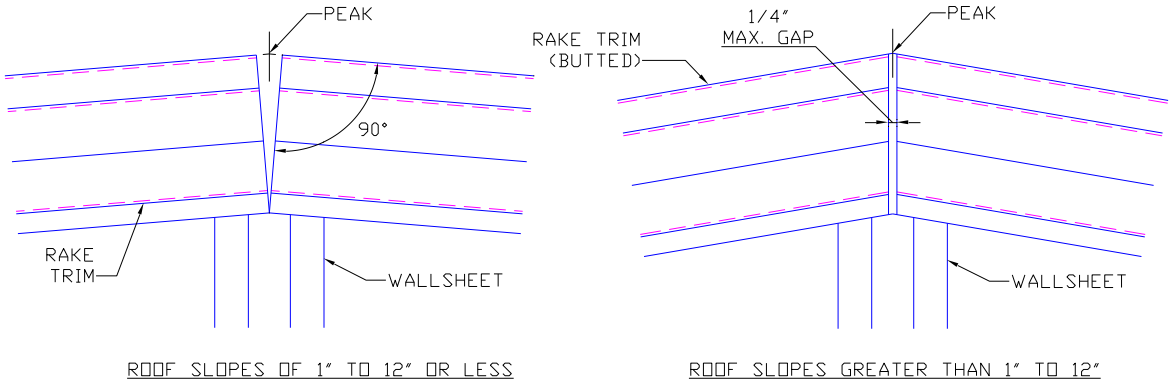

ILLUS. 10.5 RAKE TRIMS AT PEAK

Where the rake trim pieces meet at the ridge, install peak flashing with (2) rows of gun grade mastic and trim screws, located similar to rake trim endlaps.

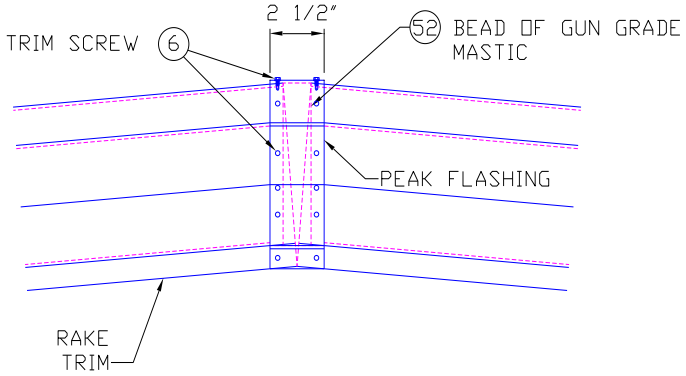

ILLUS. 10.6 INSTALLING PEAK FLASHING

To complete the trim along the rake, install the sign with (2) ⑥ and (2) ㉖ screws.

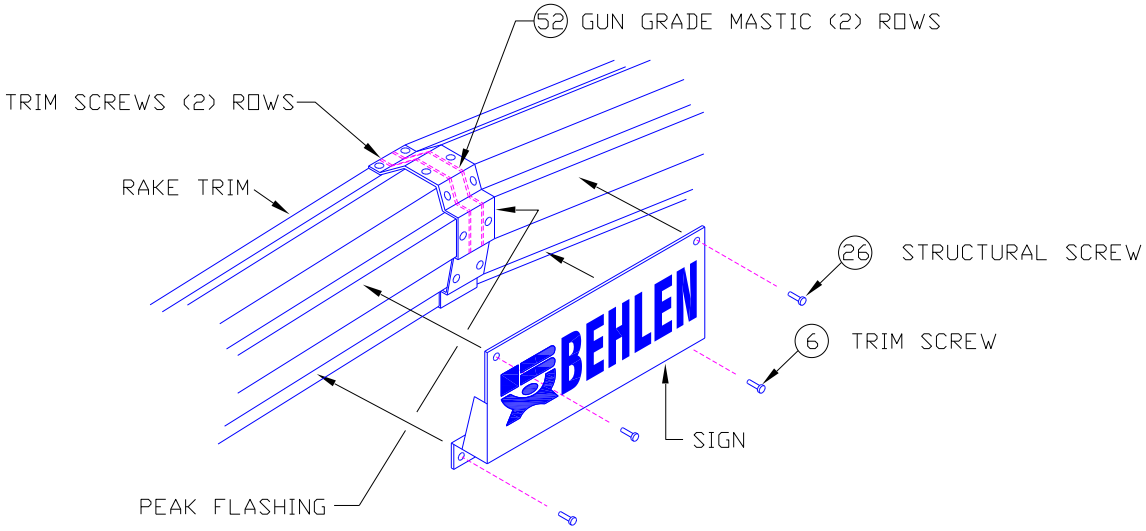

ILLUS. 10.7 INSTALL SIGN AT PEAK

10.D RAKE TRIM TO EAVE TRIM CORNER

Where the eave and rake trims meet at a low eave corner a corner cap and outside corner box will be used to finish the corner. (Corner box option where applicable)
Field cut top of outside corner box (as required) and install along with a corner cap, over the eave and rake trims using gun grade mastic and trim screws to assure a watertight seal.

Where the outside corner box is not applicable, the gutter of eave and rake trims shall be field mitered to form a tight, closed corner. All mitered edges shall be neatly cut, fitted, and sealed with gun-grade mastic. Fasten with trim screws as required to maintain alignment and ensure a watertight installation. See Section 14.G for field mitering illustrations and instructions.

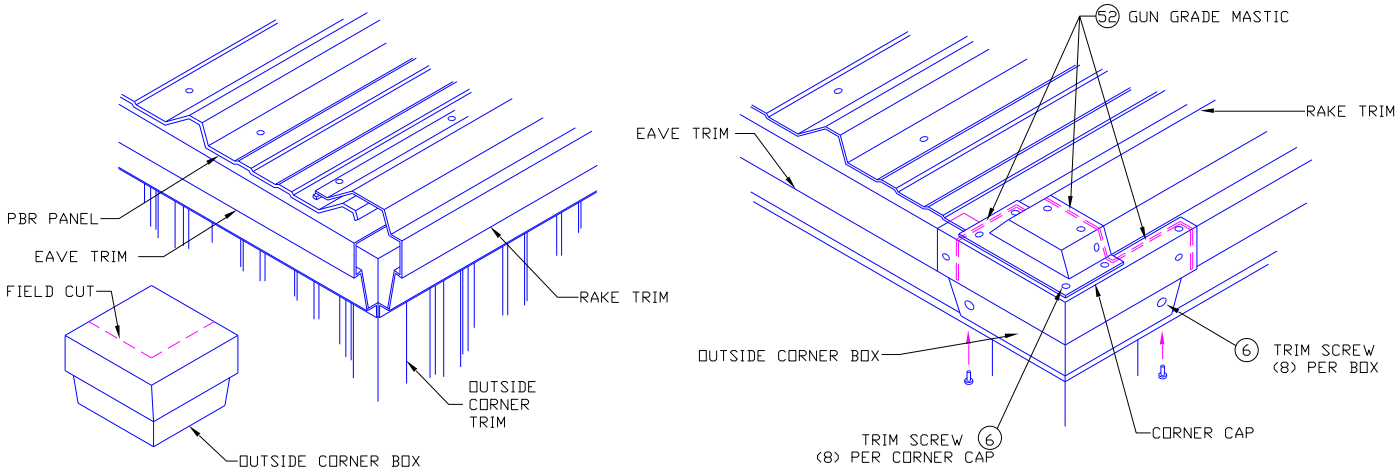

ILLUS. 10.8 INSTALLATION OF OUTSIDE CORNER BOX AND CORNER CAP

10.E RAKE TRIM TO EAVE FLASHING CORNER

Where the eave flashing and rake trim meet at a low eave corner, a (RH) right-hand or (LH) left-hand bird stop will be used to flash to the back side of the rake trim.

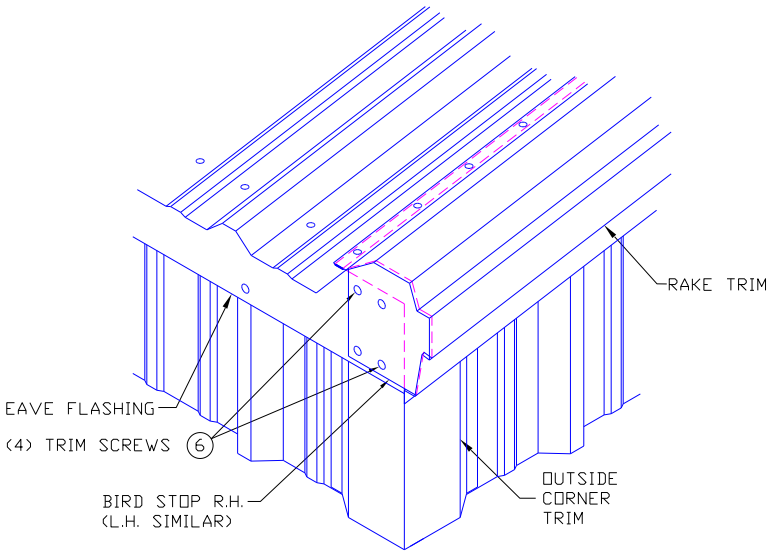

ILLUS. 10.9 INSTALLING BIRD STOPS AT CORNERS

For information on the transition of gutter to the rake trim (SEE SECTIONS 12, 13 or 14).

10.F ENDING AT HIGH EAVE CORNER

End rake trim at the edge of the outside corner trim on the wall (see ILLUS. 10.10)

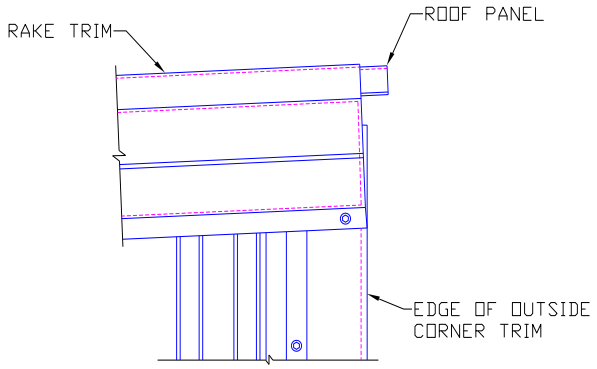

ILLUS. 10.10 RAKE TRIM ENDS AT HIGH EAVE

11 EAVE TRIM (HIGH EAVE)

To insure proper alignment of high eave trim, stretch a string line from corner to corner and pop a chalk line.

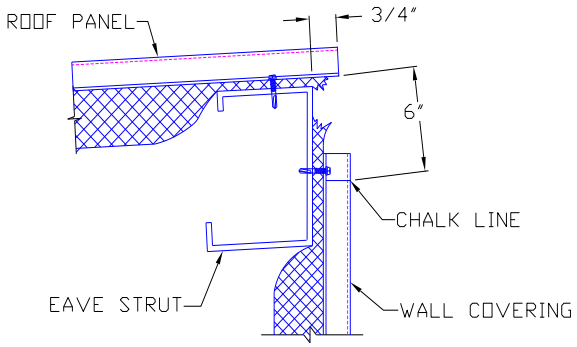

ILLUS. 11.1 MARKING CHALK LINE ALONG EAVE

11.A POSITIONING AND STARTING AT CORNER

Begin high eave trim flush with edge of outside corner trim.

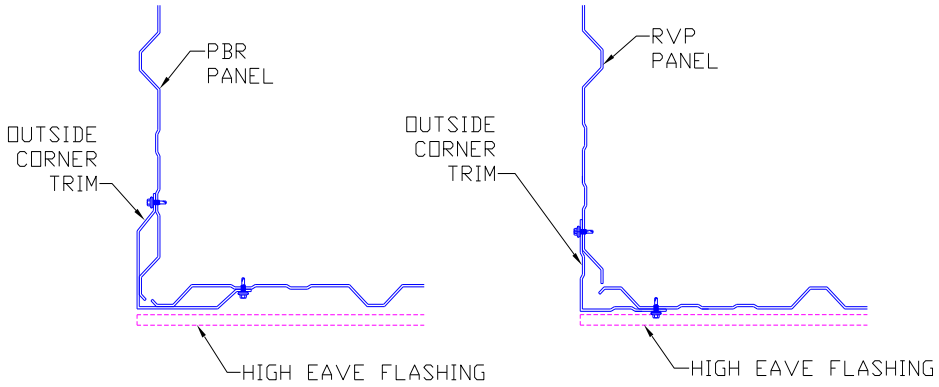

ILLUS. 11.2 BEGIN HIGH EAVE TRIM AT CORNER

Place the high eave trim over the roof panel and position from the eave strut by using dimension in TABLE C. Using these dimensions will keep the front face of the eave trim 90 degrees to the roof surface, thus assuring that the outside corner boxes will fit properly at the corners. Position the bottom edge of the high eave trim along the chalk line. Insert coped flashing between high eave trim and wall panel, then secure the trim to the wall panels at 12” centers for PBR walls or 6” centers for RVP walls.

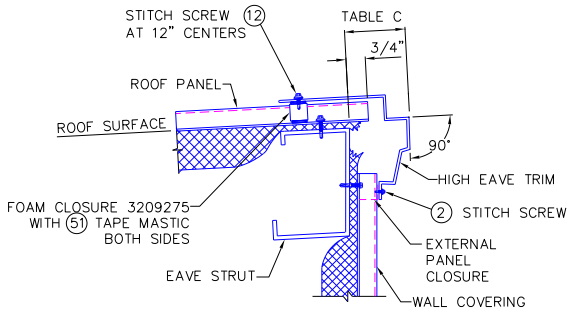

ILLUS. 11.3 POSITIONING HIGH EAVE TRIM

TABLE C	
ROOF SLOPE	DIM.
1/2" to 12"	3 5/16"
1" to 12"	3 1/8"
1 1/2" to 12"	2 15/16"
2" to 12"	2 3/4"
2 1/2" to 12"	2 9/16"
3" to 12"	2 3/8"
3 1/2" to 12"	2 3/16"

Before attaching high eave trim to the roof panel, set foam closures on a line of tape mastic and then apply tape mastic on top of closures. Then secure high eave trim to roof panels with stitch screws (see ILLUS. 11.3).

11.B SPLICING HIGH EAVE TRIM

Install and align all other high eave trim sections in the same manner allowing a minimum 2" lap. Each lap will contain gun grade mastic and (8) trim screws. (see ILLUS. 11.4)

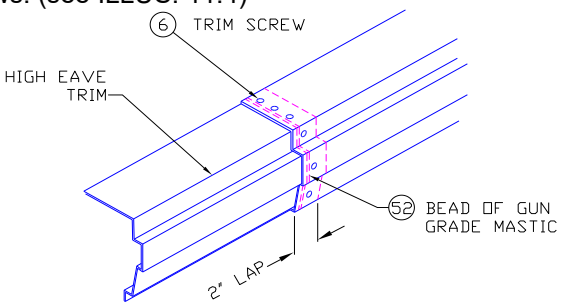

ILLUS. 11.4 SPLICING HIGH EAVE TRIM

11.C FINISHING (EAVE TO RAKE) AT CORNER

The outside corner box will be field cut to fit the corner condition and then installed using gun grade mastic and (8) trim screws. The corner will be finished by installing the high eave corner cap using gun grade mastic and (5) trim screws (see ILLUS. 11.5). (Corner box option where applicable)

Where the outside corner box is not applicable, the gutter of eave and rake trims shall be field mitered to form a tight, closed corner. All mitered edges shall be neatly cut, fitted, and sealed with gun-grade mastic. Fasten with trim screws as required to maintain alignment and ensure a watertight installation. See Section 14.G for field mitering illustrations and instructions.

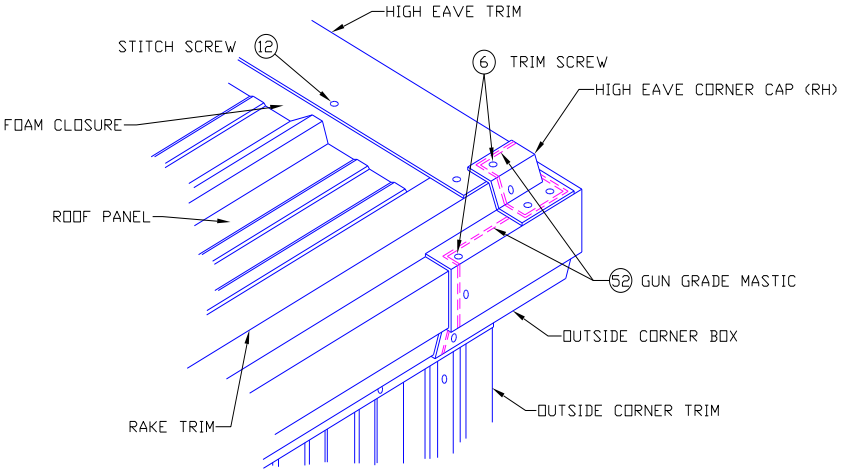

ILLUS. 11.5 FINISHING HIGH EAVE TO RAKE CORNER

11.D INSTALLING SIGN

Use (2) ⑥ and (2) ㉖ screws to install the sign along the high eave (see ILLUS. 11.6)

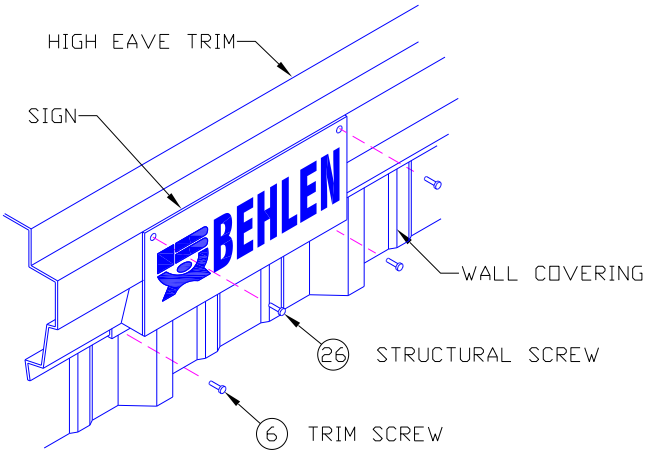

ILLUS. 11.6 INSTALLING SIGN

12 STANDARD GUTTER

Gutter installation must follow placement of eave flashing, rake trim and bird stops at the corner (see ILLUS. 12.1).

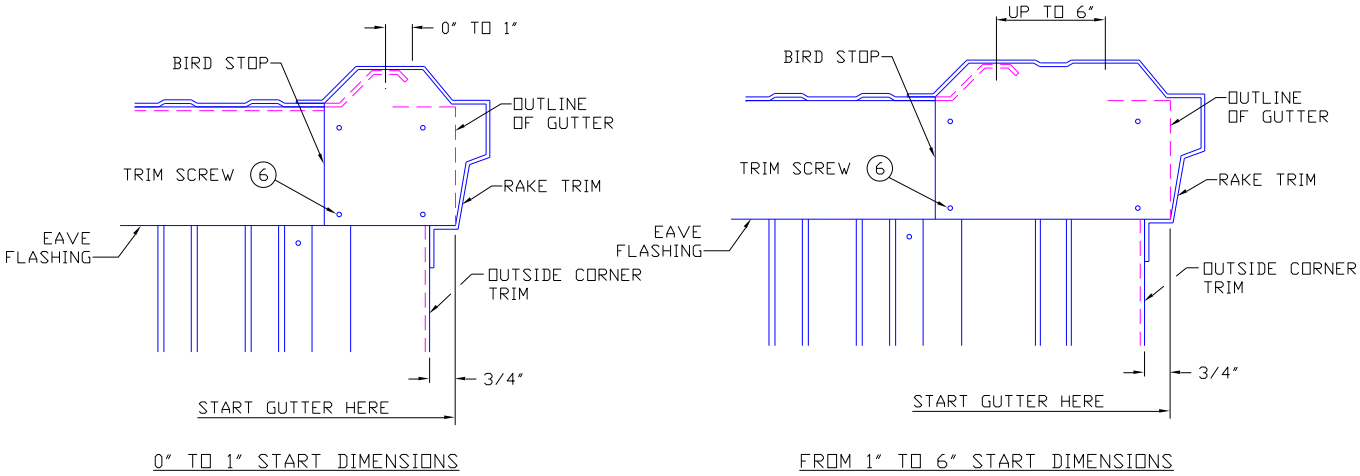

ILLUS. 12.1 INSTALL BIRD STOP AT CORNER

12.A INSTALLING END CAP

Install the gutter end cap as shown in ILLUS. 12.2, at a location based on the roof panel “START DIMENSION” (see ILLUS. 12.1) using gun grade mastic and (8) trim screws in back and bottom of gutter. Trim screws in the front face of the gutter will be installing while attaching the outside corner box.

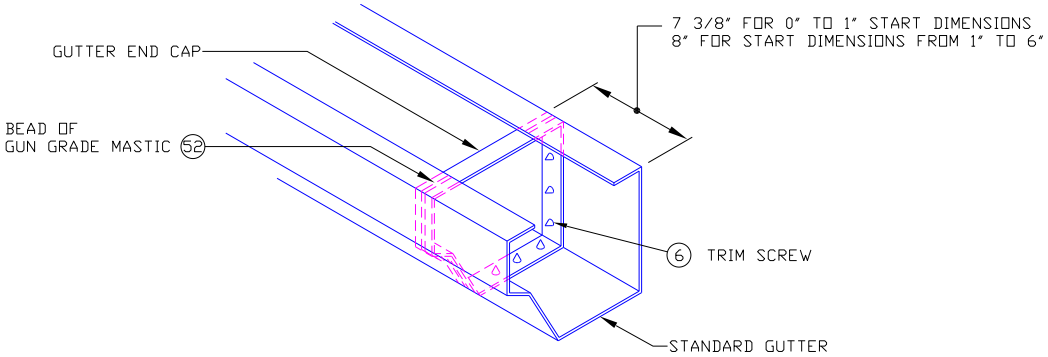

ILLUS. 12.2 INSTALLING GUTTER END CAP

12.B SPREADER ANGLES

Install gutter spreader angles, using (2) trim screws, in the first section of gutter (see ILLUS. 12.3).

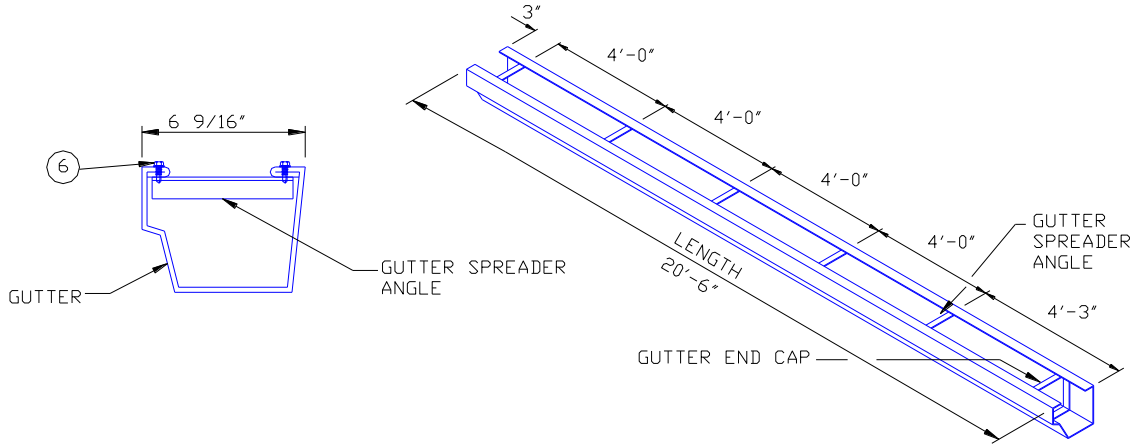

ILLUS. 12.3 INSTALL GUTTER SPREADER ANGLES

(OPTIONAL LOCATION FOR SPREADER ANGLES)
If desired, the locations of the 4'-0" spaces can be adjusted so as to fall at the major ribs of the roof panels.

12.C POSITIONING FIRST GUTTER AT CORNER

Raise the first section of gutter and position at building corner (see ILLUS. 12.1) attaching it to the roof panel with stitch screws at 6" centers (see ILLUS. 12.4). Make sure the panel overhangs the back lip of the gutter.

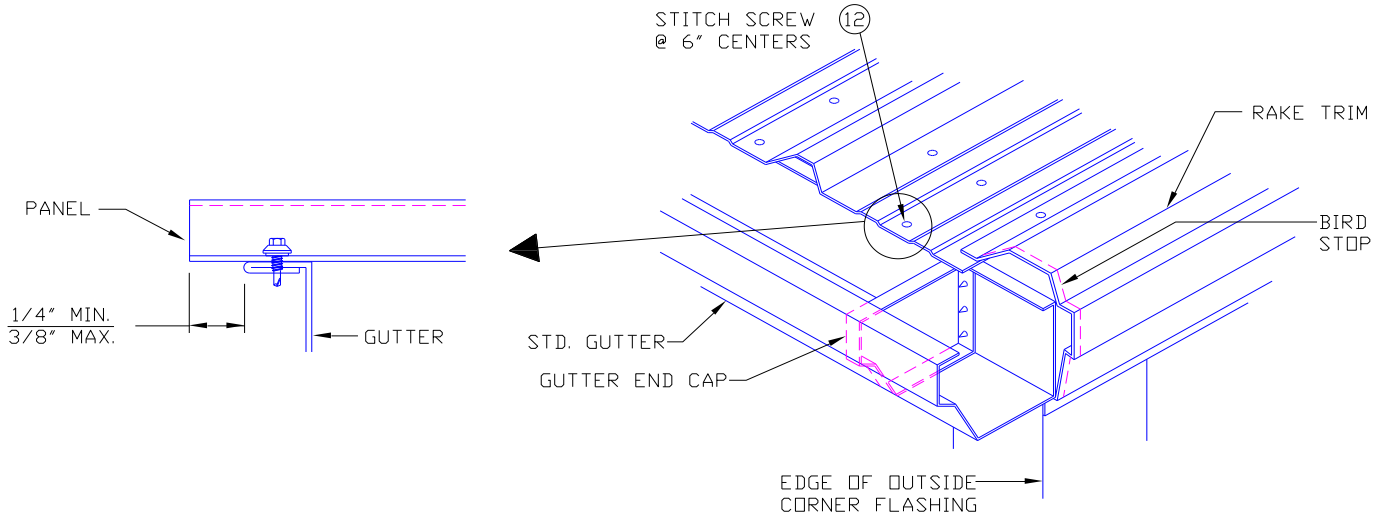

ILLUS. 12.4 POSITION AND ATTACH GUTTER

12.D INSTALL GUTTER HANGER STRAPS

Install the 1st hanger strap (approx. 1 foot) from the corner as shown in ILLUS. 12.5 and all others at the spacing shown in TABLE D or TABLE E. When installing hangers, position to keep the front face of the gutter 90 degrees to the roof surface, thus assuring that the outside corner boxes will fit properly at the corners.

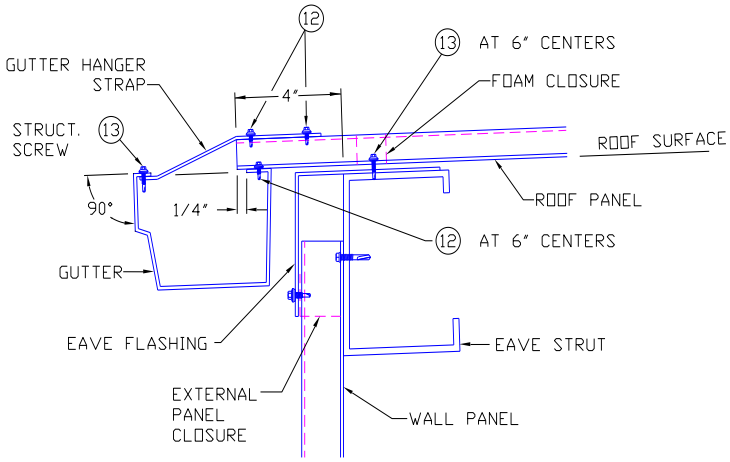

ILLUS. 12.5 INSTALLING GUTTER HANGER STRAPS

TABLE D (Buildings Ordered Using Roof Live Load)	
ROOF LIVE LOAD	STRAP SPACING
Less than 40#L.L.	4'-0"
40# L.L. and greater	2'-0"

TABLE E (Buildings Ordered Using Ground Snow Load)	
GROUND SNOW LOAD	STRAP SPACING
Less than 60 PSF	4'-0"
60 PSF and greater	2'-0"

12.E SPLICING GUTTER

Install spreader angles in the next gutter section as shown in ILLUS. 12.3 at the spacing shown in ILLUS. 12.6 and lap with previous section as shown in ILLUS. 12.7. Seal with gun grade mastic and (14) trim screws.

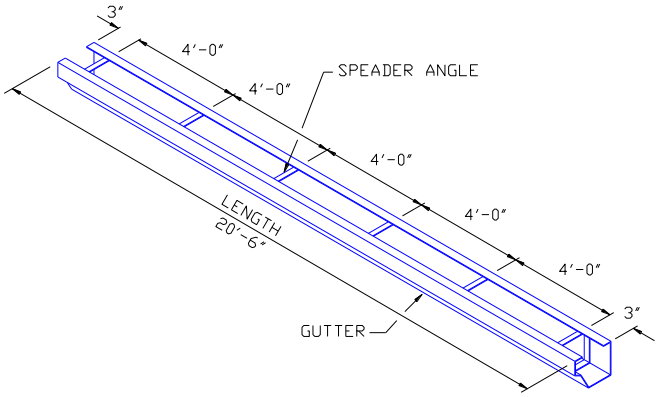

ILLUS. 12.6 INSTALL GUTTER SPREADER ANGLES

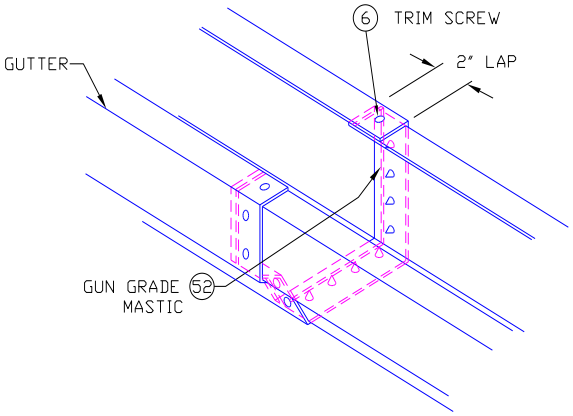

ILLUS. 12.7 SPLICING GUTTER SECTIONS

Install and align all other sections of gutter on runs of 130 ft. or less in the same manner with the last section ending similar to ILLUS. 12.4.

12.F INSTALLING GUTTER EXPANSION JOINT

On gutter runs exceeding 130 feet, it is desirable to have the expansion joints located so that they are centered on a roof panel rib. See TABLE F below for recommended locations. If a BUILDING EXPANSION JOINT is required, a gutter expansion joint is required at the same location.

TABLE F EXPANSION JOINT LOCATIONS	
Length of Run	Location
130'-1" to 260'-0"	Approx. mid point
260'-1" to 390'-0"	Approx. 1/3 points
390'-1" to 520'-0"	Approx. 1/4 points

The expansion joint is made by installing gutter end caps each side of a gutter splice. The end of one gutter section is field cut so that 3” of the back of the gutter is removed and an end cap is then installed flush with the notch.
The other gutter end will have an end cap installed 3” in from the end (see ILLUS. 12.8).
The gutter sections are then lapped 2” but not sealed or connected by fasteners.

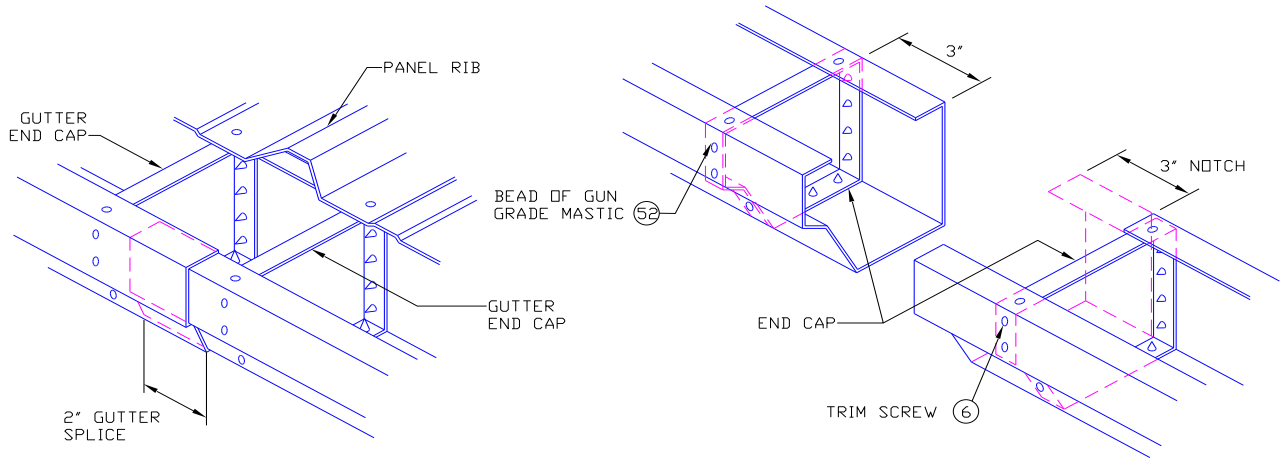

ILLUS. 12.8 GUTTER END CAPS AT EXPANSION JOINT

12.G FINISHING (GUTTER TO RAKE) AT CORNER

The outside corner box will be field cut to fit the corner condition and then installed. When attaching an outside corner box to gutter/end cap, the (9) trim screws in the top and front face of the box must pass through outside corner box, gutter and gutter end cap. These screws should be installed within 1 to 3 hours of applying gun grade mastic around the end cap (see ILLUS. 12.9). (Corner box option where applicable)

Where the outside corner box is not applicable, the gutter of eave and rake trims shall be field mitered to form a tight, closed corner. All mitered edges shall be neatly cut, fitted, and sealed with gun-grade mastic. Fasten with trim screws as required to maintain alignment and ensure a watertight installation. See Section 14.G for field mitering illustrations and instructions.

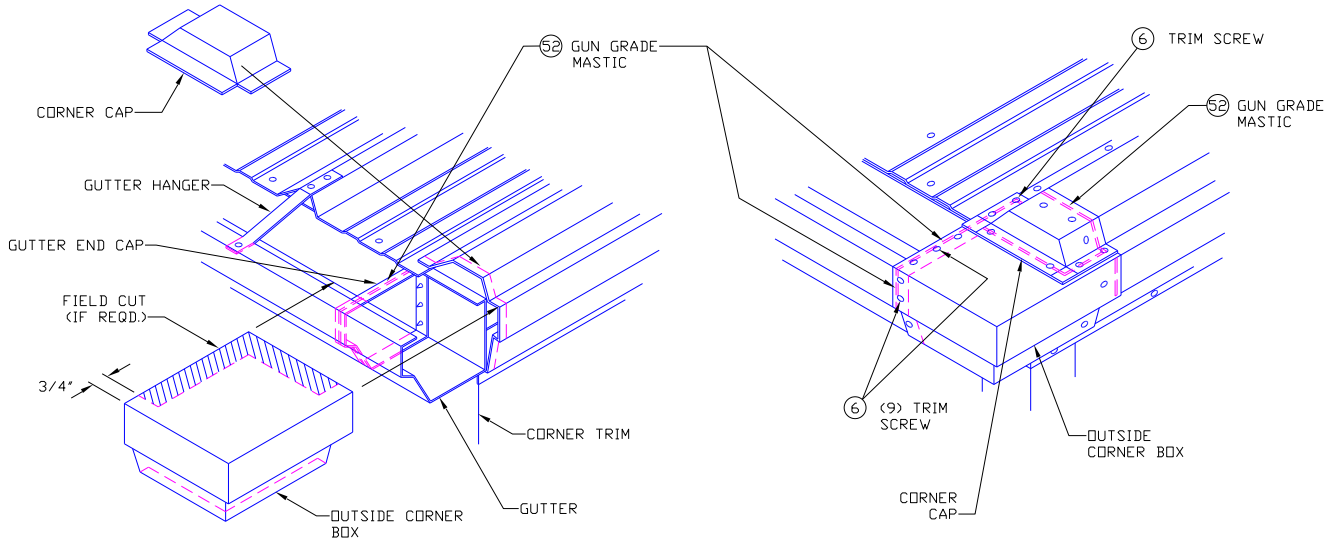

ILLUS. 12.9 INSTALL OUTSIDE CORNER BOX AND CORNER CAP

Install corner cap using gun grade mastic and (10) trim screws.

13 HIGH CAPACITY GUTTER

Gutter installation must follow placement of eave flashing, rake trim and bird stops at the corner (see ILLUS. 13.1)

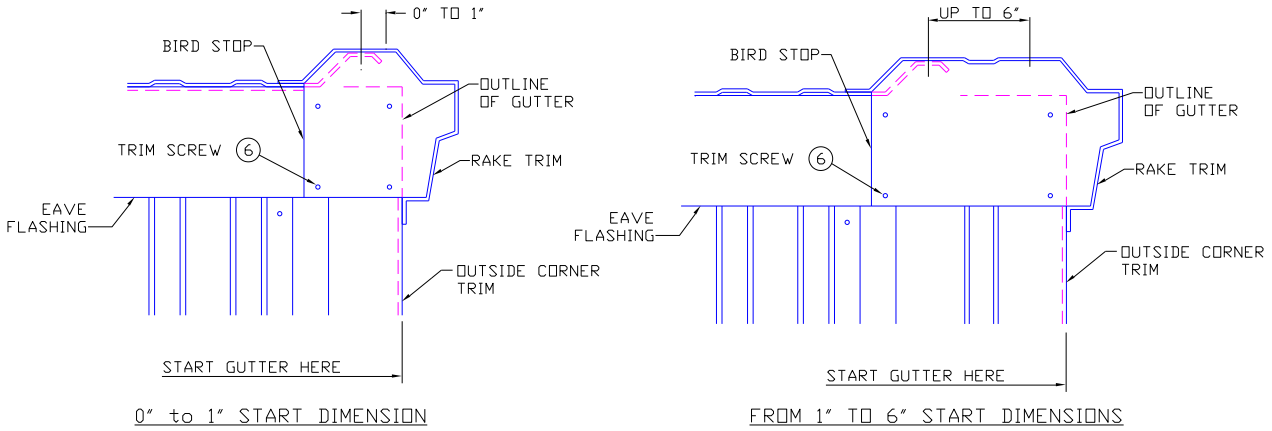

ILLUS. 13.1 INSTALL GUTTER SPREADER ANGLES

13.A INSTALLING END CAP

Install the gutter end cap as shown in ILLUS. 13.2, at a location based on the roof panel "START DIMENSION" (see ILLUS. 13.1) using gun grade mastic and (8) trim screws in back and bottom of gutter. Trim screws in the front face of the gutter will be installed while attaching the outside corner box.

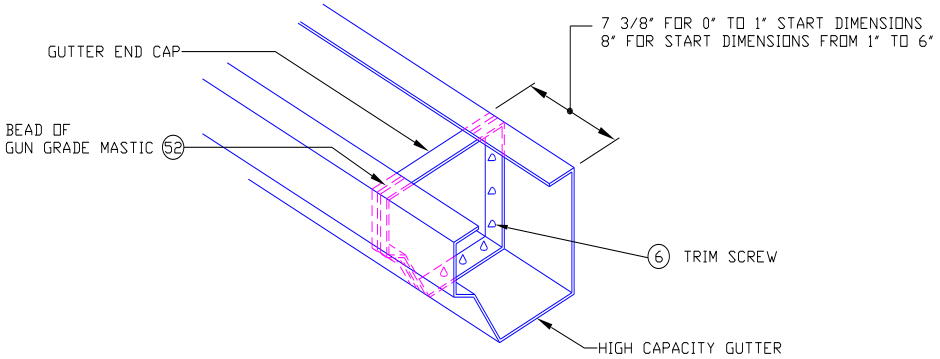

ILLUS. 13.2 INSTALLING GUTTER END CAP

13.B SPREADER ANGLES

Install the gutter spreader angles, using (2) trim screws, in the first section of gutter (see ILLUS. 13.3).

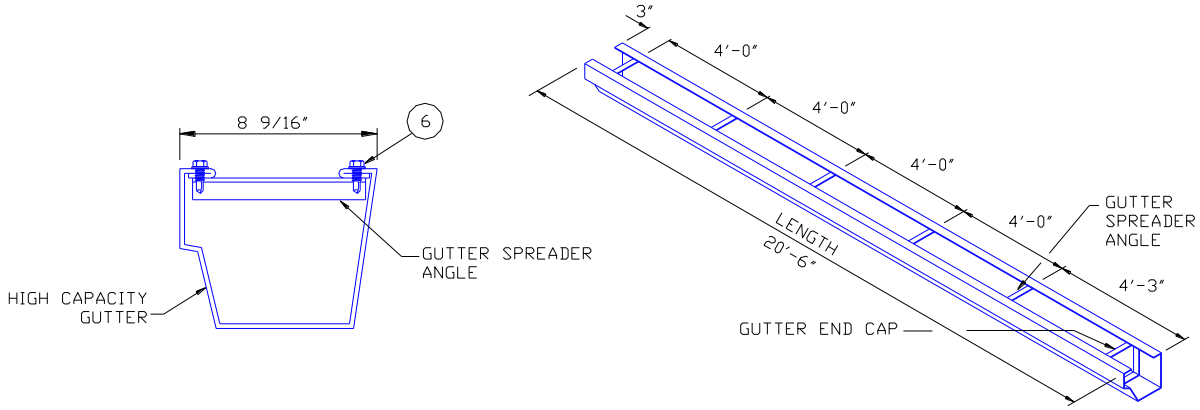

ILLUS. 13.3 INSTALL GUTTER SPREADER ANGLES

(OPTIONAL LOCATION FOR SPREADER ANGLES)
If desired, the locations of the 4'-0" spaces can be adjusted so as to fall at the major ribs of the roof panels.

13.C POSITIONING FIRST GUTTER AT CORNER

Raise the first section of gutter and position at building corner (see ILLUS. 13.1) attaching it to the roof panel with stitch screws at 6” centers (see ILLUS. 13.4). Make sure the panel overhangs the back lip of the gutter.

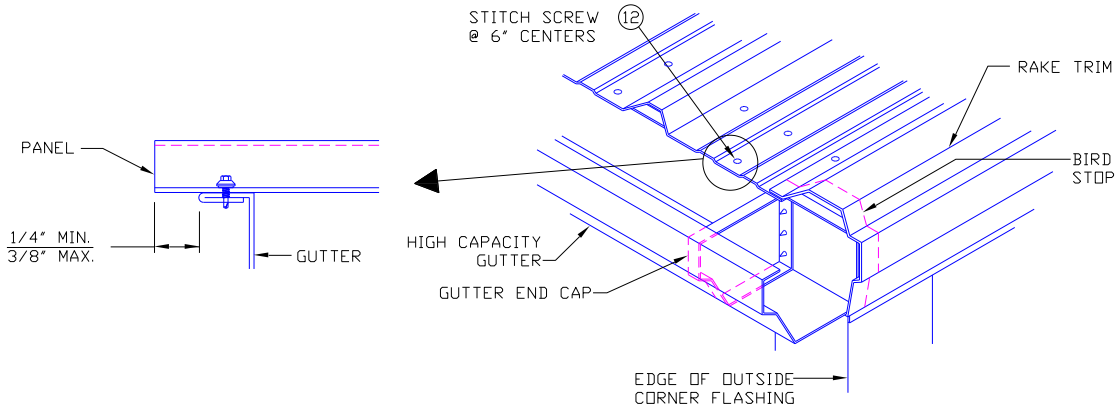

ILLUS. 13.4 POSITION AND ATTACH GUTTER

13.D INSTALLING GUTTER HANGER STRAPS

Install the 1st hanger strap (approx. 1 foot) from the corner as shown in ILLUS. 13.5 and all others at 2 foot spaces. When installing hangers, position to keep the front face of the gutter 90 degrees to the roof surface, thus assuring that the outside corner boxes will fit properly at the corners.

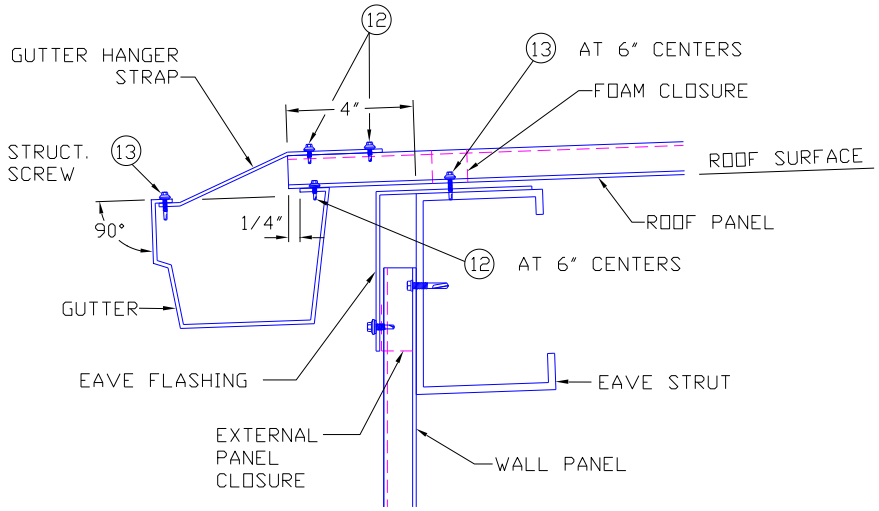

ILLUS. 13.5 INSTALLING GUTTER HANGER STRAPS

13.E SPLICING GUTTER

Install spreader angles in the next gutter section as shown in ILLUS. 13.3 at the spacing shown in ILLUS. 13.6 and lap with previous section as shown in ILLUS. 13.7. Seal with gun grade mastic and (14) trim screws.

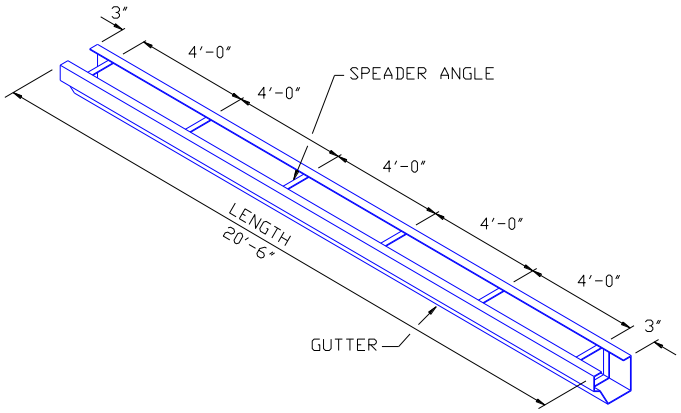

ILLUS. 13.6 INSTALL GUTTER SPREADER ANGLES

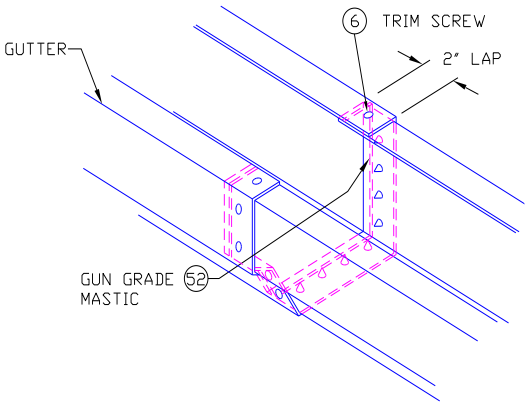

ILLUS. 13.7 SPLICING GUTTER SECTIONS

Install and align all other sections of gutter on runs of 130 ft. or less in the same manner with the last section ending similar to ILLUS. 13.4.

13.F INSTALLING GUTTER EXPANSION JOINT

On gutter runs exceeding 130 feet, it is desirable to have the expansion joints located so that they are centered on a roof panel rib. See TABLE G below for recommended locations. If a BUILDING EXPANSION JOINT is required, a gutter expansion joint is required at the same location.

TABLE G EXPANSION JOINT LOCATIONS	
Length of Run	Location
130'-1" to 260'-0"	Approx. mid point
260'-1" to 390'-0"	Approx. 1/3 points
390'-1" to 520'-0"	Approx. 1/4 points

The expansion joint is made by installing gutter end caps each side of a gutter splice. The end of one gutter section is field cut so that 3" of the back of the gutter is removed and an end cap is then installed flush with the notch.
The other gutter end will have an end cap installed 3" in from the end (see ILLUS. 13.8).
The gutter sections are then lapped 2" but not sealed or connected by fasteners.

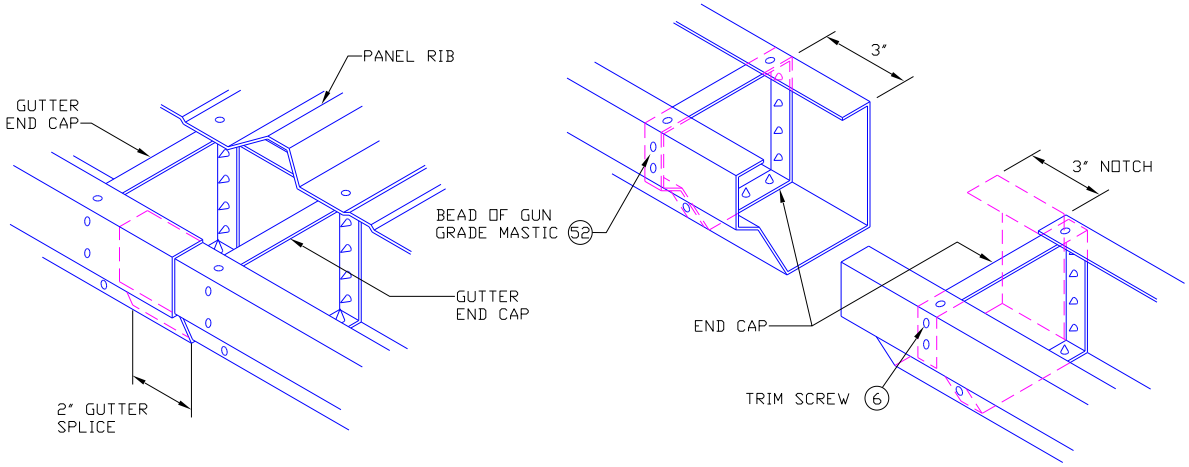

ILLUS. 13.8 GUTTER END CAPS AT EXPANSION JOINT

13.G INSTALLING GUTTER STOP

Install the gutter stop with (2) trim screws (see ILLUS. 13.9). (Gutter Stop only to be used with this style of gutter)

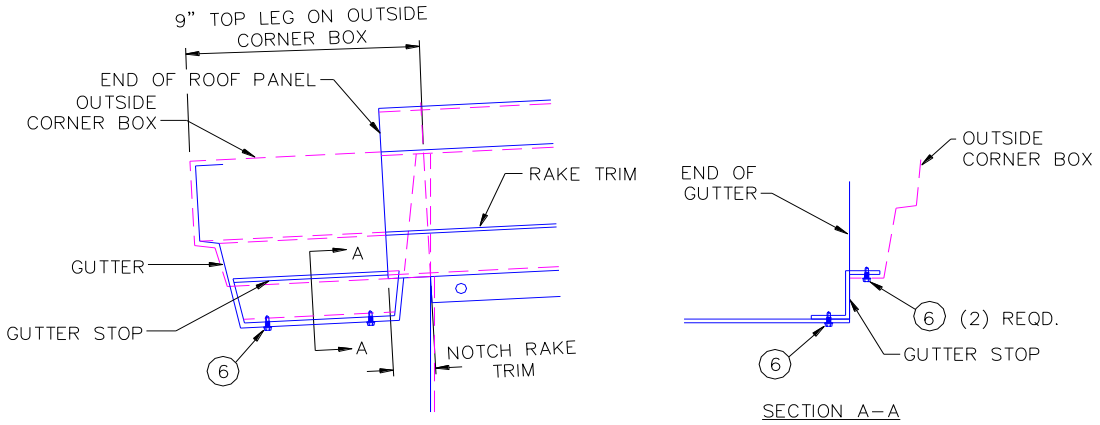

ILLUS. 13.9 INSTALLING GUTTER STOP

13.H FINISHING (GUTTER TO RAKE) AT CORNER

The outside corner box will be field cut to fit the corner condition and then installed. When attaching an outside corner box to gutter/end cap, the (9) trim screws in the top and front face of the box must pass through outside corner box, gutter and gutter end cap. These screws should be installed within 1 to 3 hours of applying gun grade mastic around the end cap (see ILLUS. 13.10). (Corner box option where applicable)

Where the outside corner box is not applicable, the gutter of eave and rake trims shall be field mitered to form a tight, closed corner. All mitered edges shall be neatly cut, fitted, and sealed with gun-grade mastic. Fasten with trim screws as required to maintain alignment and ensure a watertight installation. See Section 14.G for field mitering illustrations and instructions.

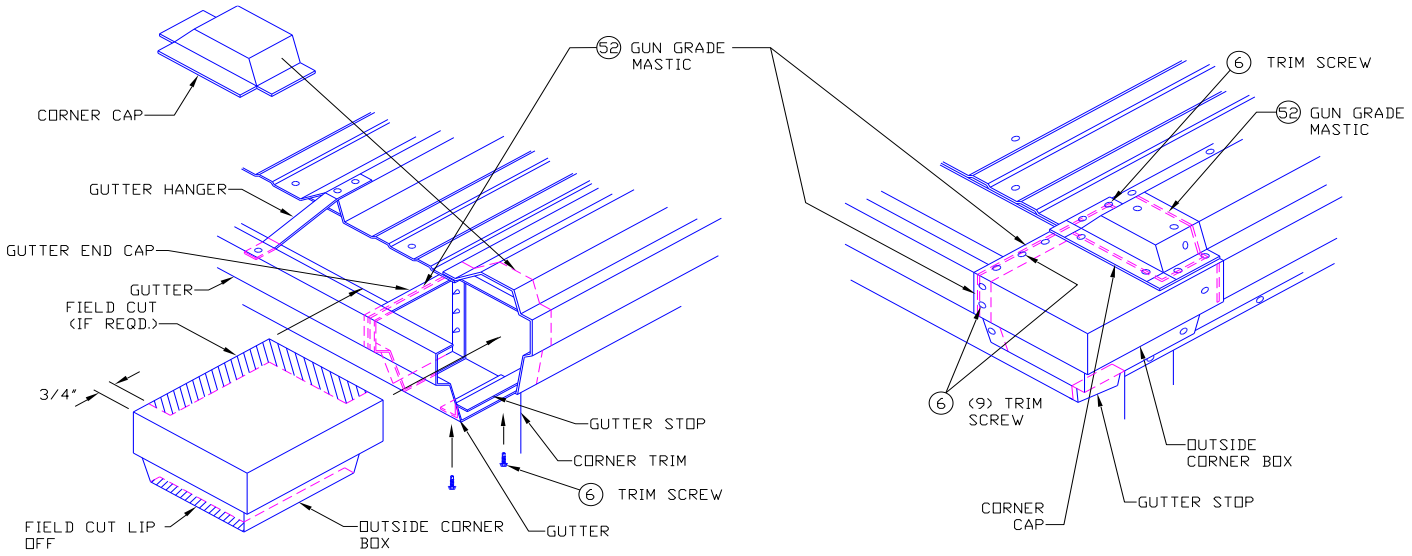

ILLUS. 13.10 INSTALL OUTSIDE CORNER BOX AND CORNER CAP

Install corner cap using gun grade mastic and (10) trim screws.

14 RIB CONCEALING GUTTER

Gutter installation must follow placement of eave flashing, rake trim and bird stops at the corner (see ILLUS. 14.1).

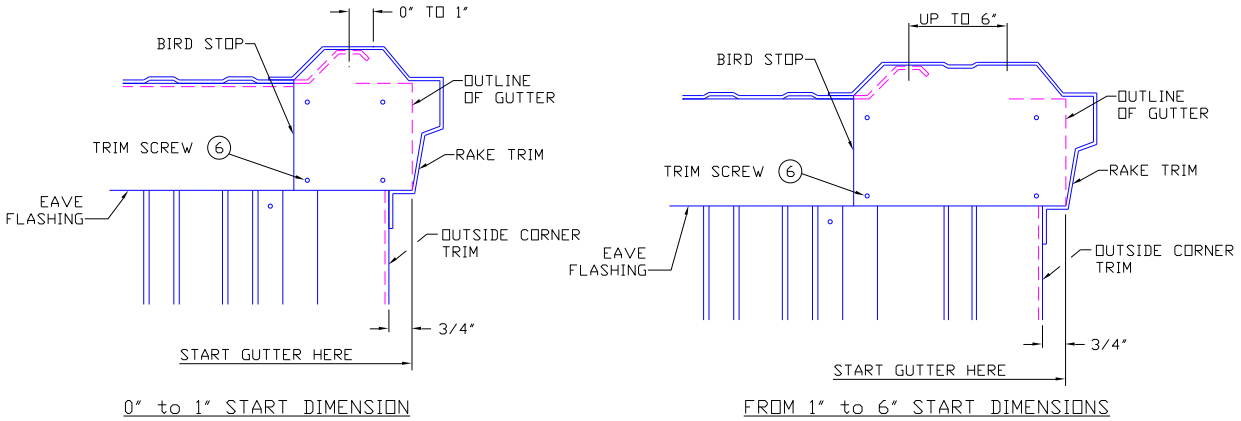

ILLUS. 14.1 INSTALL BIRD STOP AT CORNER

14.A INSTALLING END CAP

A portion of the rib concealing gutter will be removed, in the field, based on the roof panel “START DIMENSION” (see ILLUS. 14.1).
Install gutter end cap (see ILLUS. 14.2) using gun grade mastic and (8) trim screws in back and bottom of gutter. Trim screws in the front face of the gutter will be installed while attaching the outside corner box.

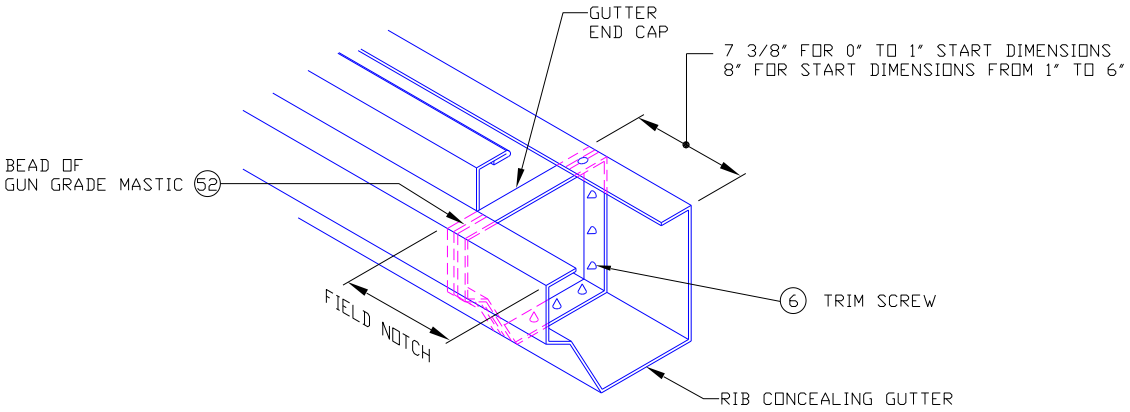

ILLUS. 14.2 INSTALLING GUTTER END CAP

14.B POSITIONING FIRST GUTTER AT CORNER

Raise the first section of gutter and position at building corner (see ILLUS. 14.1) attaching it to the roof panel with stitch screws at 6” centers (see ILLUS. 14.3). Make sure the panel overhangs the back lip of the gutter.

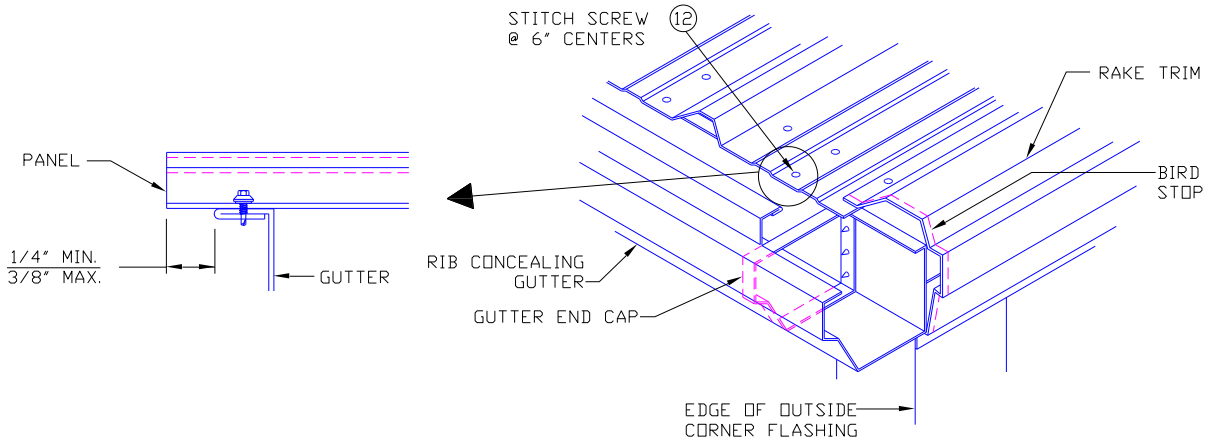

ILLUS. 14.3 POSITION AND ATTACH GUTTER

14.C INSTALLING GUTTER HANGERS

Install the 1st gutter hanger (approx. 1 foot) from the corner as shown in ILLUS. 14.4 and all others at 2’-0” centers. When installing hangers, position so as to keep the front face of the gutter 90 degrees to the roof surface, thus assuring that the outside corner boxes will fit properly at the corners.

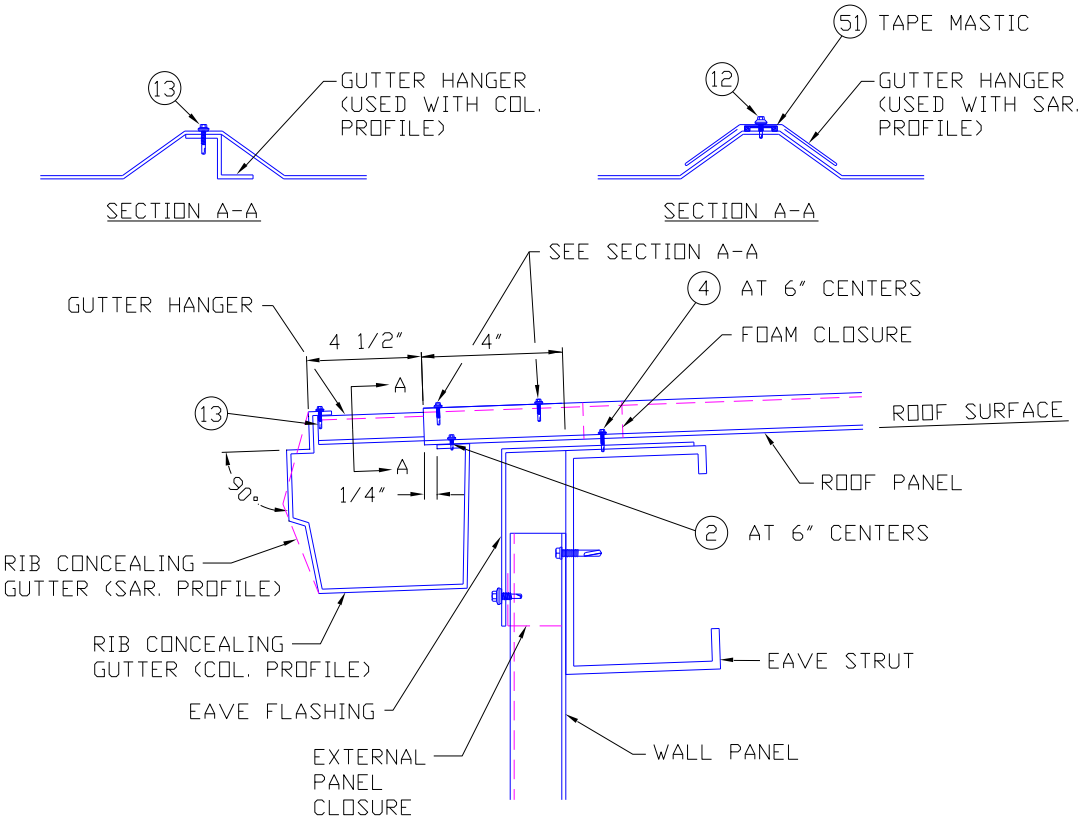

ILLUS. 14.4 INSTALLING GUTTER HANGERS

14.D SPLICING GUTTER

Install and align all other gutter sections by lapping to the previous gutter section as shown in ILLUS. 14.5. Seal lap with gun grade mastic and (16) trim screws.

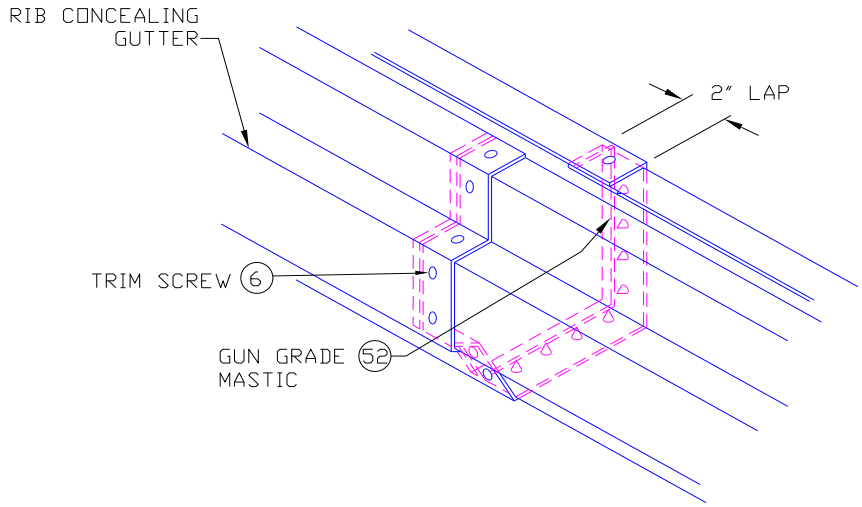

ILLUS. 14.5 SPLICING GUTTER SECTIONS

14.E INSTALLING GUTTER EXPANSION JOINT

On gutter runs exceeding 130 feet, it is desirable to have the expansion joints located so that they are centered on a roof panel rib. See TABLE below for recommended locations. If a BUILDING EXPANSION JOINT is required, a gutter expansion joint is required at the same location.

EXPANSION JOINT LOCATIONS	
Length of Run	Location
130'-1" to 260'-0"	Approx. mid point
260'-1" to 390'-0"	Approx. 1/3 points
390'-1" to 520'-0"	Approx. 1/4 points

The expansion joint is made by installing gutter end caps each side of a gutter splice (see ILLUS. 14.6).

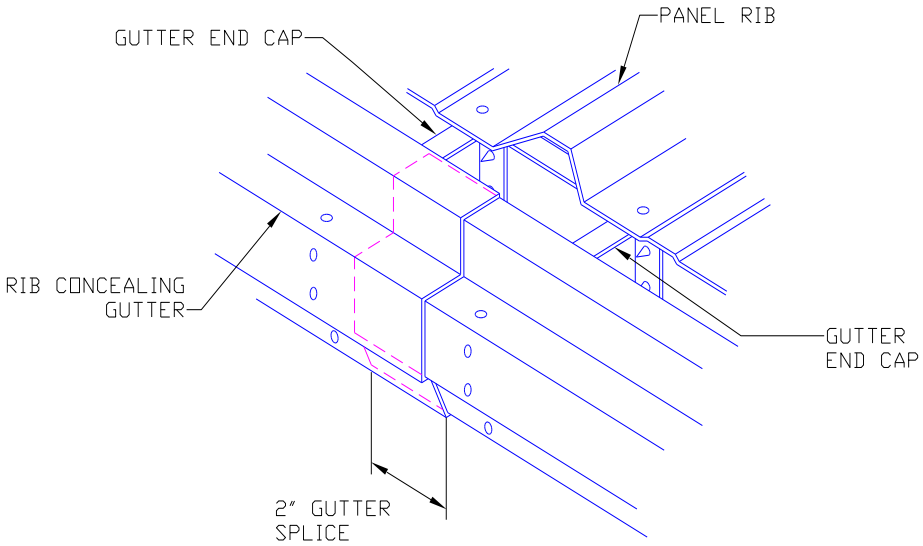

ILLUS. 14.6 GUTTER EXPANSION JOINT

The end of one gutter section is field cut so that 3” of the back of the gutter is removed and a gutter end cap is then installed flush with the notch. The other gutter end will have a gutter end cap installed 3” in from the end (see ILLUS. 14.7).
The gutter sections are then lapped 2” but not sealed or connected by fasteners (see ILLUS. 14.6).

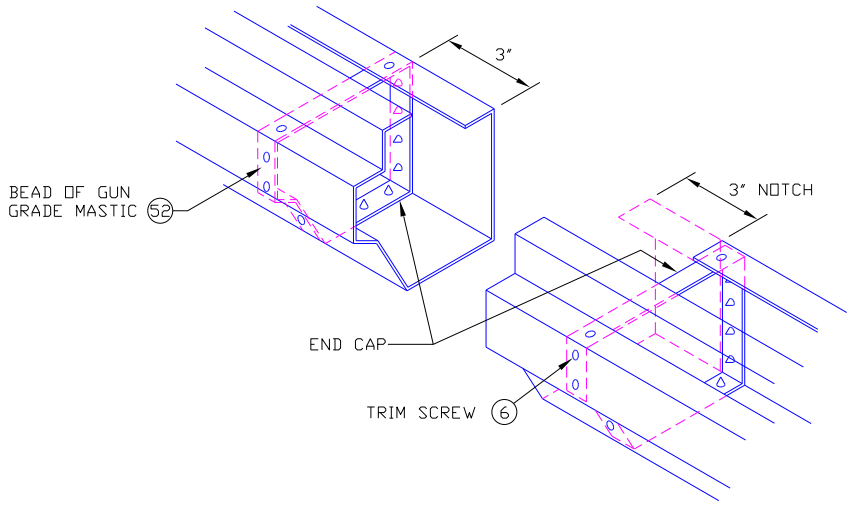

ILLUS. 14.7 GUTTER END CAPS AT EXPANSION JOINT

14.F FINISH (GUTTER TO RAKE) AT CORNER

The last section of gutter will end similar to ILLUS. 14.1. The endcap will be installed and the portion of the rib concealing gutter will be removed (see ILLUS. 14.2).
The outside corner box will be field cut to fit the corner condition and then installed. When attaching an outside corner box to gutter/end cap, the (9) trim screws in the top and front face of the box must pass through outside corner box, gutter and gutter end cap. These screws should be installed within 1 to 3 hours of applying gun grade mastic around the end cap (see ILLUS. 14.8). (Corner box option where applicable)

Where the outside corner box is not applicable, the gutter of eave and rake trims shall be field mitered to form a tight, closed corner. All mitered edges shall be neatly cut, fitted, and sealed with gun-grade mastic. Fasten with trim screws as required to maintain alignment and ensure a watertight installation. See Section 14.G for field mitering illustrations and instructions.

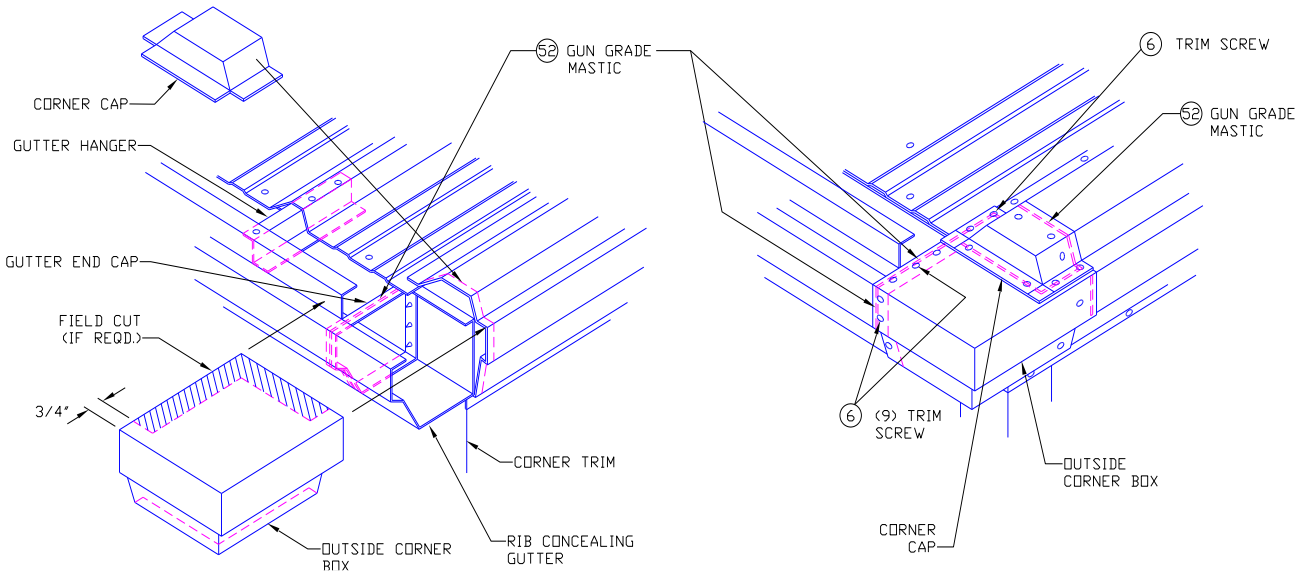

ILLUS. 14.8 INSTALL OUTSIDE CORNER BOX AND CORNER CAP

Install corner cap (see ILLUS. 14.8) using gun grade mastic and (10) trim screws.

The corner will be finished by field cutting and bending a portion of the rib concealing corner trim, then attaching with trim screws (see ILLUS. 14.9).

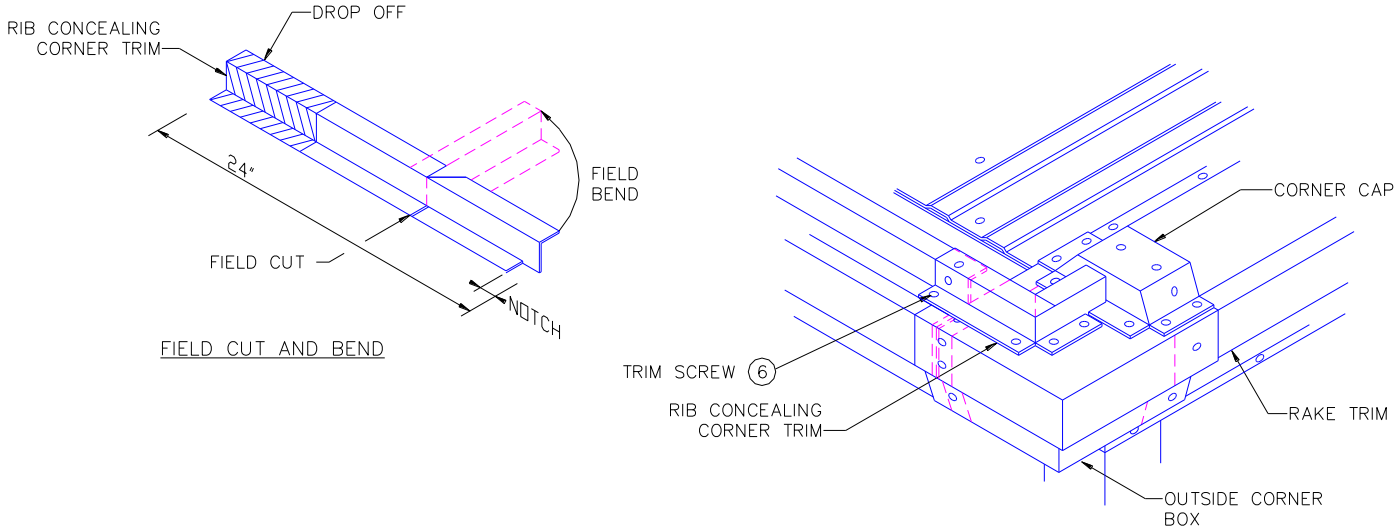

ILLUS. 14.9 FINISHING GUTTER TO RAKE CORNER

14.G FIELD MITERING AT CORNERS

Where the outside corner box is not applicable, the gutter, eave and rake trims shall be field mitered to form a tight, closed corner. All mitered edges shall be neatly cut, fitted, and sealed with gun-grade mastic. Fasten with trim screws as required to maintain alignment and ensure a watertight installation.

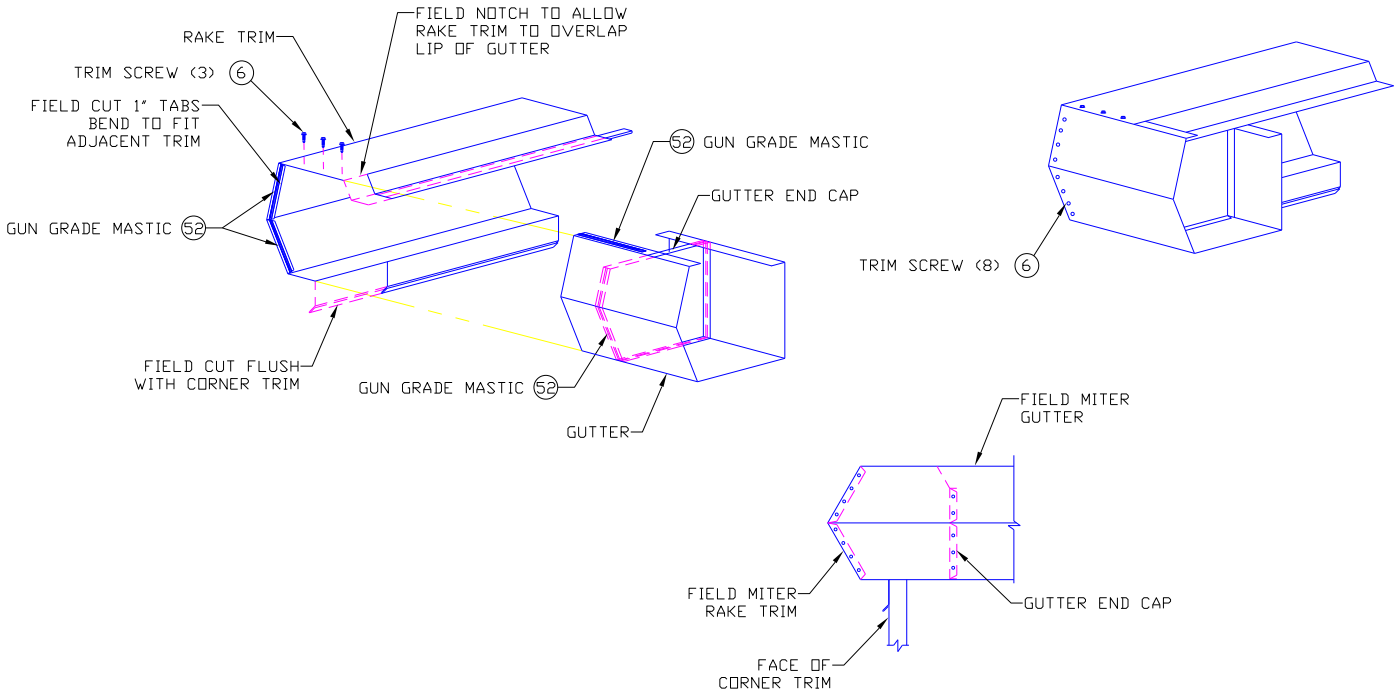

ILLUS. 14.10 MITERING GUTTER TO RAKE TRIM CORNER

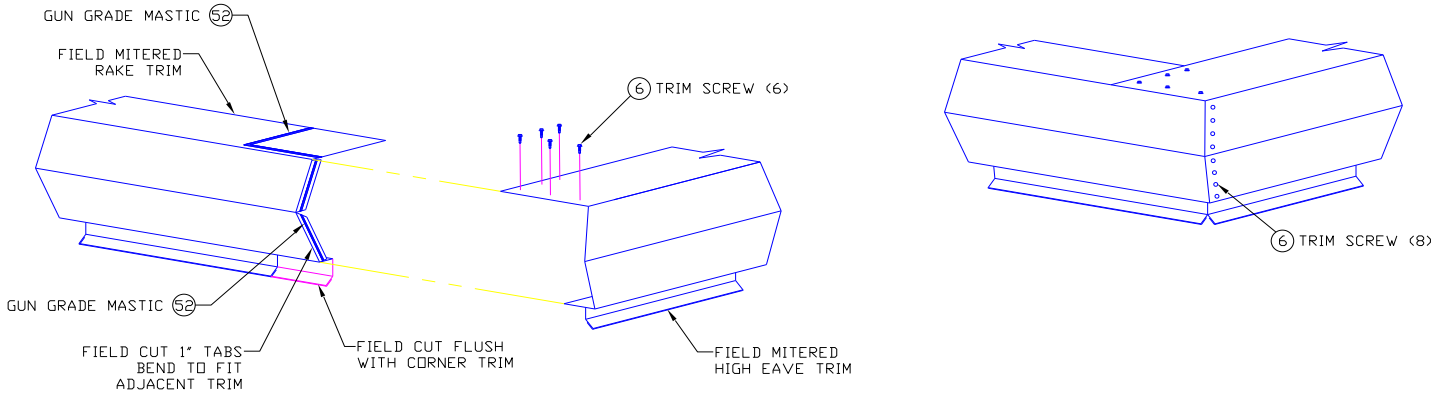

ILLUS. 14.11 MITERING RAKE TRIM TO HIGH EAVE TRIM CORNER

15 ACCESSORIES

15.A DOWNSPOUTS

Downspout locations should be located at a major ribs of PBR wall panels and on the outstanding flat of RVP wall panels (see ILLUS. 15.1).

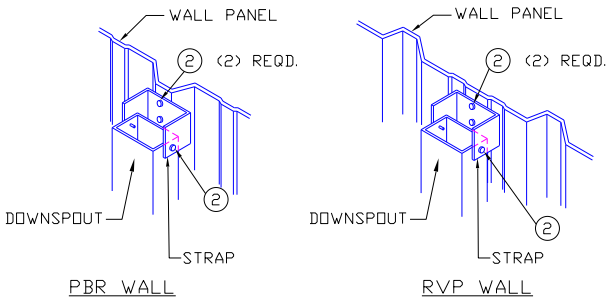

ILLUS. 15.1 LOCATING AND ATTACHING DOWNSPOUT TO WALL

Once the spacing has been determined, cut and bend down tabs in the bottom of the gutter (see ILLUS. 15.2) and attach downspout with (3) trim screws.

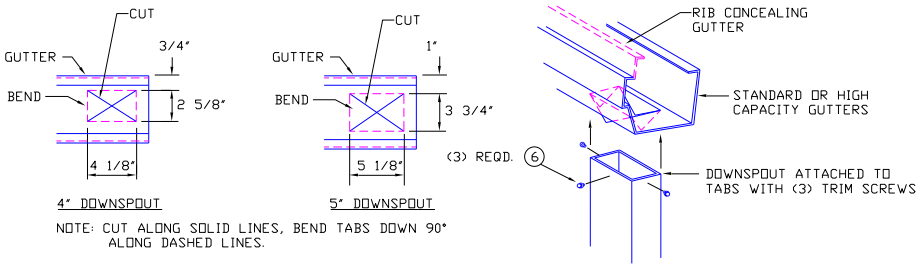

ILLUS. 15.2 CUTTING HOLE IN GUTTER AND ATTACHING DOWNSPOUT

Downspout will be secured to the wall with a strap and (4) stitch screws at a 6'-0" maximum spacing (see ILLUS. 15.1 and ILLUS. 15.3). Splice downspout and attach the elbow at base as shown in ILLUS. 15.3.

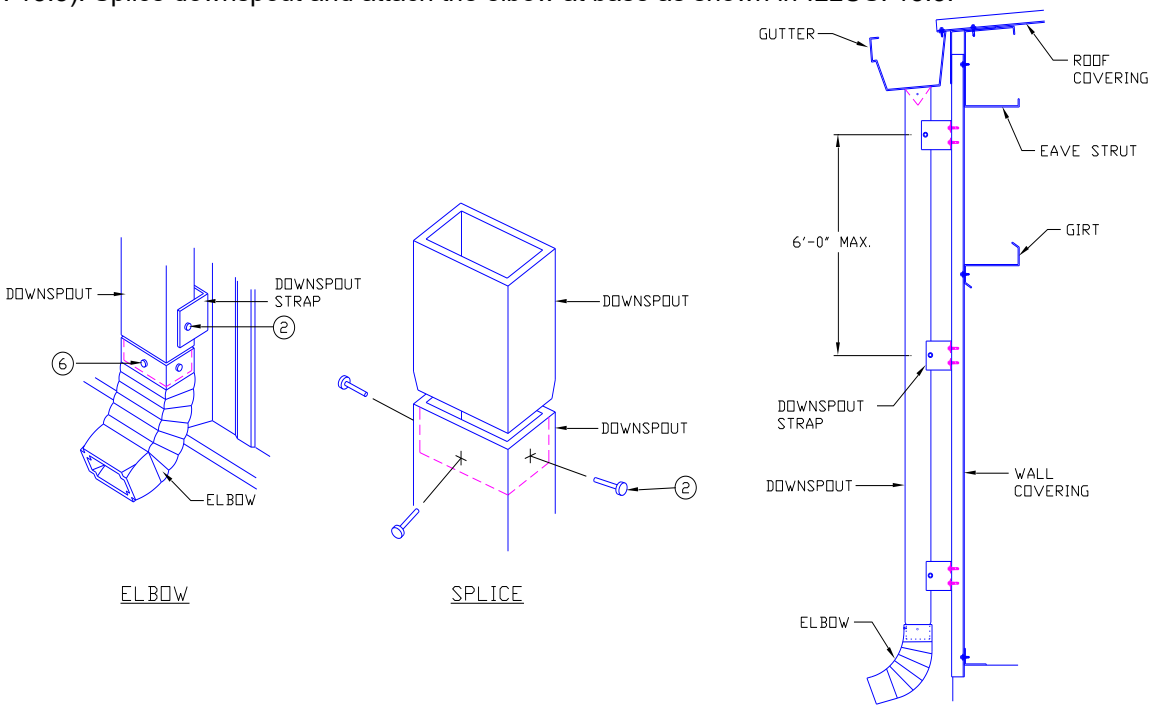

ILLUS. 15.3 DOWNSPOUT CONNECTIONS

15.B SKYLIGHTS

Translucent panel systems referenced in this manual are not covered under Florida Product Approval. These components have not been evaluated for compliance with the Florida Building Code and shall not be installed on projects requiring Florida Product Approval unless independently approved documentation is supplied.

The typical location for a 10'-6" long translucent skylight on the roof surface is to start at a purlin line, span (2) nominal 5 ft. purlin spaces ending with a 6" end lap on the upper end. On roofs with different purlin spacings refer to the erection drawings for any special framing requirements.

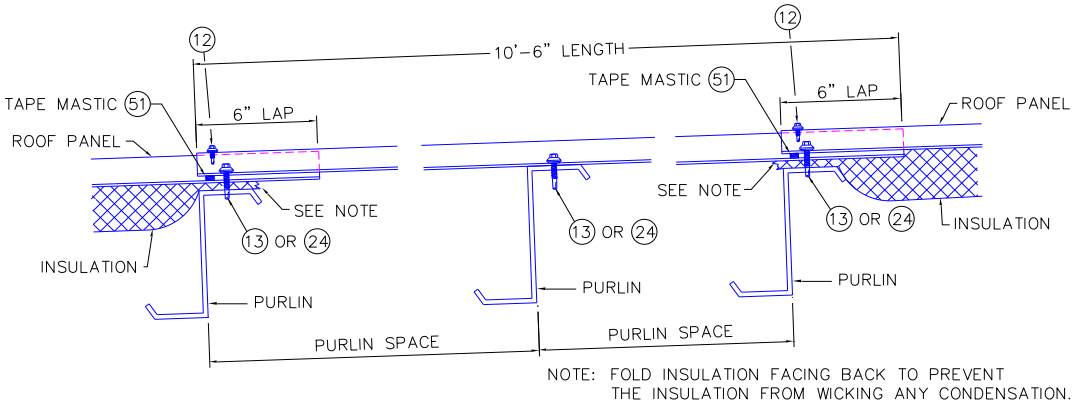

ILLUS. 15.4 TRANSLUCENT SKYLIGHT ON ROOF

If applicable to the project, the following translucent panel(s) shall be supplied:

1. 3998105 Uninsulated Stronglight

CAUTION NOTE: The translucent panel will not support the weight of a person walking on the roof. The User is responsible for ensuring that the installation and use of light-transmitting panels comply with all applicable State, Federal, and OSHA laws and regulations, including, but not limited to, providing guarding at all light-transmitting panels with screens, fixed standard railings, or other approved safety controls designed to prevent fall-through.

Along the sides of the skylight a TM147PT LTP Flashing will be used to trim the opening and contain the insulation. Tape mastic will be used to weatherproof the sidelap (see ILLUS. 15.5).

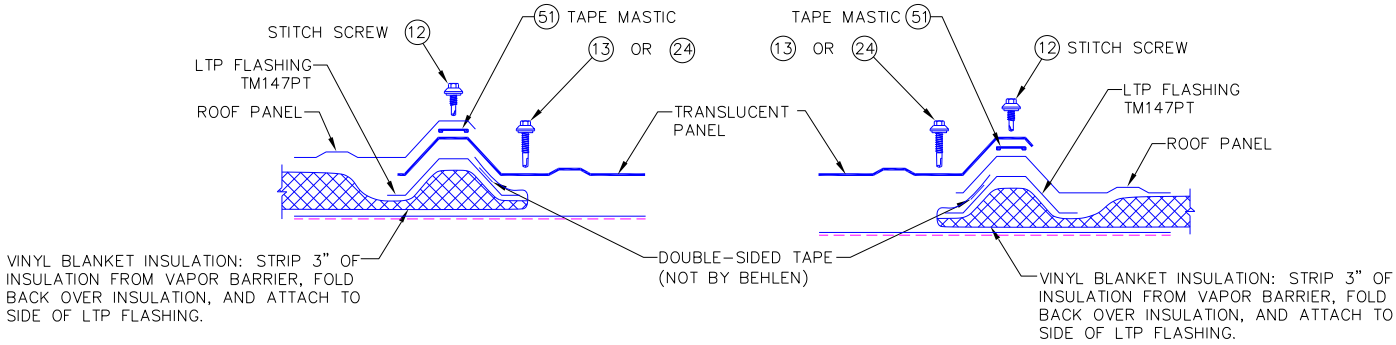

ILLUS. 15.5 ROOF PANEL SIDELAPS

The spacing of fasteners used to secure the skylight to the adjacent metal roof panels will be 10" on center, use a ⑫ stitch screw.

The screw pattern used to attach translucent skylights to the purlin lines applies to all purlin line locations beneath the skylight for both UL Class 90 and non-UL Class 90 roof construction.

It is suggested to pre-drill the light transmitting panels before installing fasteners. This will help prevent fractures which may cause possible leaks.

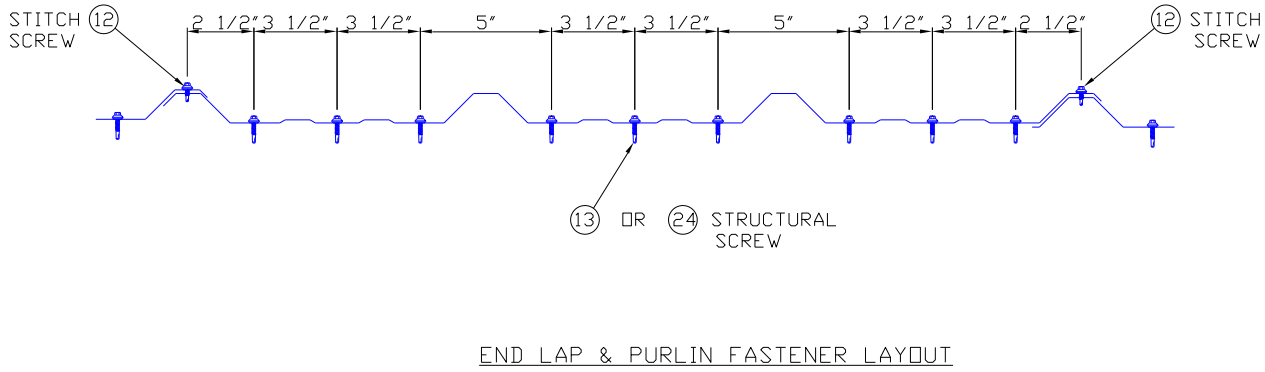

ILLUS. 15.6 FASTENERS PATTERNS

For tape mastic placement in endlaps, see ILLUS. 9.7 and ILLUS. 9.8.

15.C RIDGE VENTILATOR

Ridge ventilators described in this manual are not included under Florida Product Approval. These products have not been reviewed for compliance with the Florida Building Code and are not approved for use in jurisdictions requiring Florida Product Approval unless independently approved documentation is supplied.

When a 10 ft. long ridge ventilator, having a 9” throat width, is used at the ridge outside foam closures (3209275), gun grade mastic ⑤②, tape mastic ⑤①, and ② stitch screws will be used to secure to the roof.

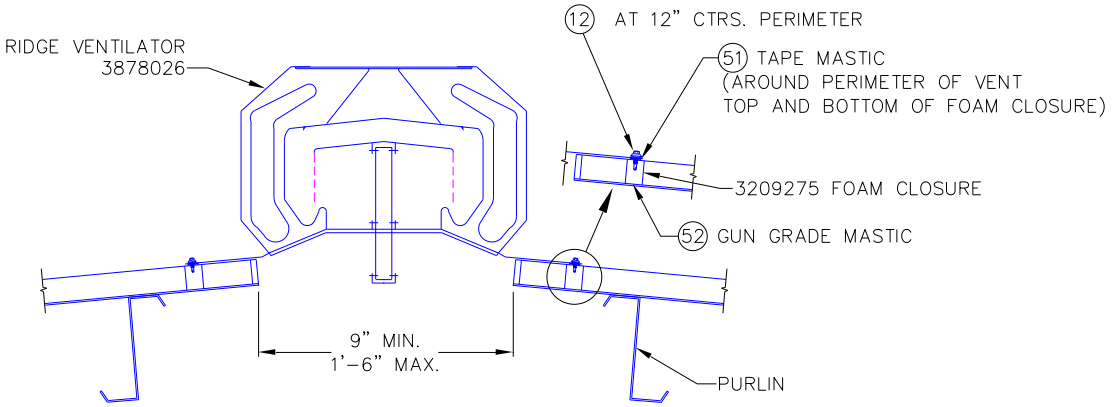

ILLUS. 15.7 INSTALLING RIDGE VENTILATOR

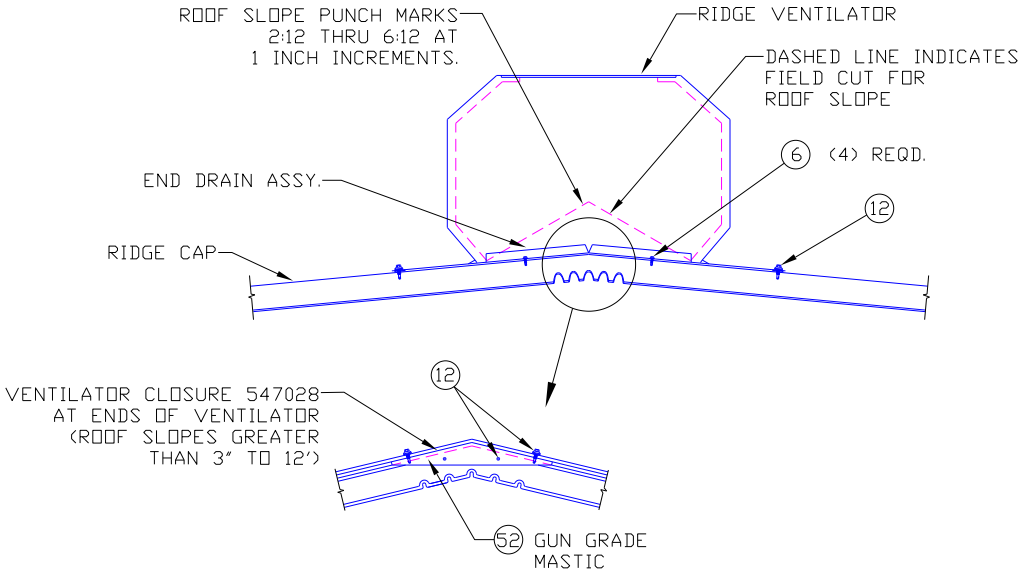

ILLUS. 15.8 END CAP ON RIDGE VENTILATOR

On roof slopes greater than 1” to 12” field modify the end cap by cutting along a line from bottom to appropriate punch mark (see ILLUS. 15.8).
Bend end drain assembly to follow exact roof slope. Position the angle on end drain assembly, behind end cap, field drill (4) holes, secure with blind rivets (see ILLUS. 15.8 and ILLUS. 15.9).

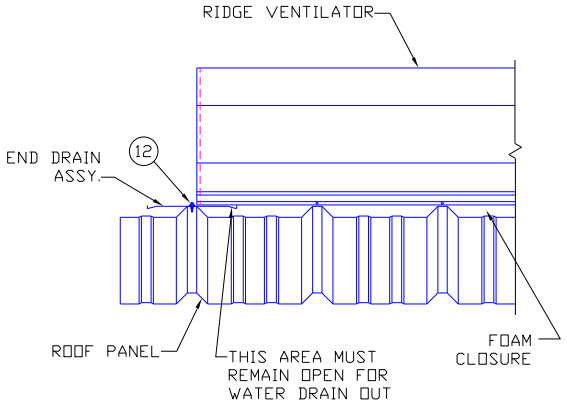

ILLUS. 15.9 END OF RIDGE VENTILATOR

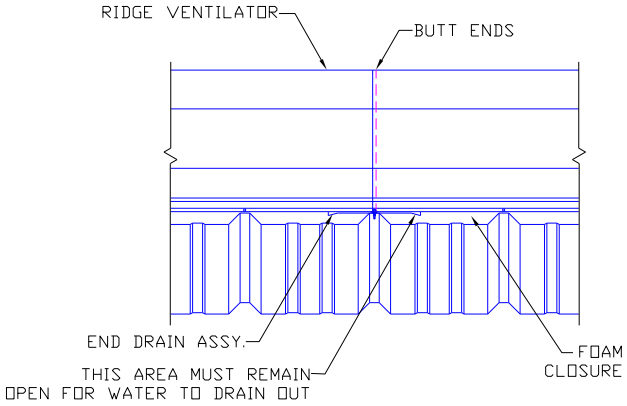

ILLUS. 15.10 CONTINUOUS RIDGE VENTILATOR JOINT

When continuous ridge ventilators are installed, butt ends of vents over end drain assembly, centered on a major rib (see ILLUS. 15.10).
No more than (5) 10 ft. ventilator sections should be connected together in a continuous run. When more than (5) are required allow a minimum of 1 ft. between each group for THERMAL MOVEMENT.

See instructions included with ridge ventilator on connecting the damper pull bars for continuous ridge vents.

15.D PIPE FLASHING

When cutting holes in the roof panel, avoid cutting the major rib unless necessary. Never cut more than one major rib.

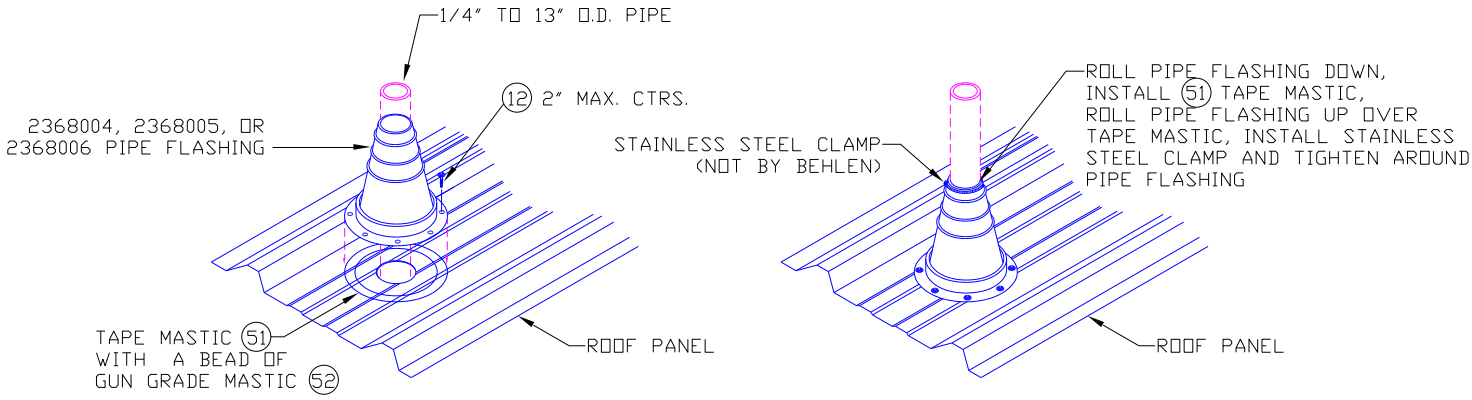

ILLUS. 15.11 INSTALLING RUBBER PIPE FLASHING

Use the following procedure for installation.

1. Cut a neat hole in the roof panel with a minimum clearance of 1" all the way around the pipe.
2. Clean the roof panel around the hole.
3. If the rubber pipe flashing has to be cut to suit the pipe size use a sharp pair of scissors and avoid nicks.
4. Apply gun grade mastic to panel or underside of the pipe flashing and attach to the roof panel as shown in ILLUS. 15.11.
5. When attaching the screws the first (2) screws should be opposite each other. Then progressively complete the fastening by pressing the base down firmly.